MANUAL LX30 DIP

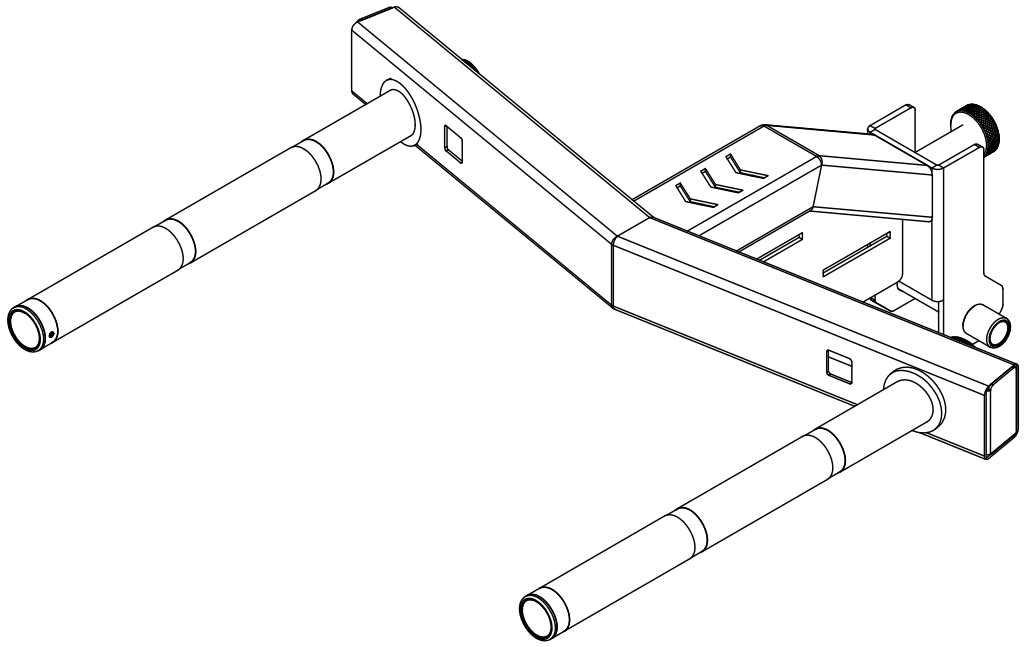

VARTEX AB
Batterivägen 14
432 32 Varberg
Sweden +46 340 549690

www.masterfitness.se
info@masterfitness.se

20250723-V1.0

IMPORTANT SAFETY NOTICE

PRECAUTIONS

This exercise machine is built for optimum safety. However, certain precautions apply whenever you operate a piece of exercise equipment. Be sure to read the entire manual before you assemble or operate your machine. In particular, note the following safety precautions:

1. **Keep children and pets away from the machine at all times. DO NOT leave children unattended in the same room with the machine.**
2. Only one person at a time should use the machine.
3. If the user experiences dizziness, nausea, chest pain, or any other abnormal symptoms, STOP the workout at once. CONSULT A PHYSICIAN IMMEDIATELY.
4. Position the machine on a clear, leveled surface. DO NOT use the machine near water or outdoors.
5. Keep hands away from all moving parts.
6. Always wear appropriate workout clothing when exercising. DO NOT wear robes or other clothing that could become caught in the machine. Running or aerobic shoes are also required when using the machine.
7. Use the machine only for its intended use as described in this manual. DO NOT use attachments not recommended by the manufacturer.
8. Do not place any sharp object around the machine.
9. Disabled person should not use the machine without a qualified person or physician in attendance.
10. Before using the machine to exercise, always do stretching exercises to properly warm up.
11. Never operate the machine if the machine is not functioning properly.
12. A spotter is recommended during exercise.

WARNING: BEFORE BEGINNING ANY EXERCISE PROGRAM, CONSULT YOUR PHYSICIAN. THIS IS ESPECIALLY IMPORTANT FOR INDIVIDUALS OVER THE AGE OF 35 OR PERSONS WITH PRE-EXISTING HEALTH PROBLEMS. READ ALL INSTRUCTIONS BEFORE USING ANY FITNESS EQUIPMENT. WE ASSUME NO RESPONSIBILITY FOR PERSONAL INJURY OR PROPERTY DAMAGE SUSTAINED BY OR THROUGH THE USE OF THIS PRODUCT.

SAVE THESE INSTRUCTIONS.

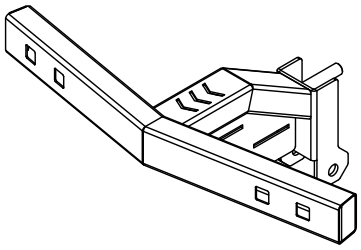

① ×1

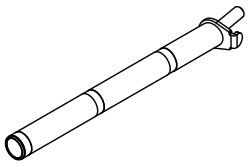

② ×2

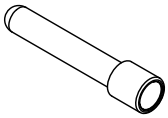

⑤ ×1

⑥ ×3

⑨ ×2

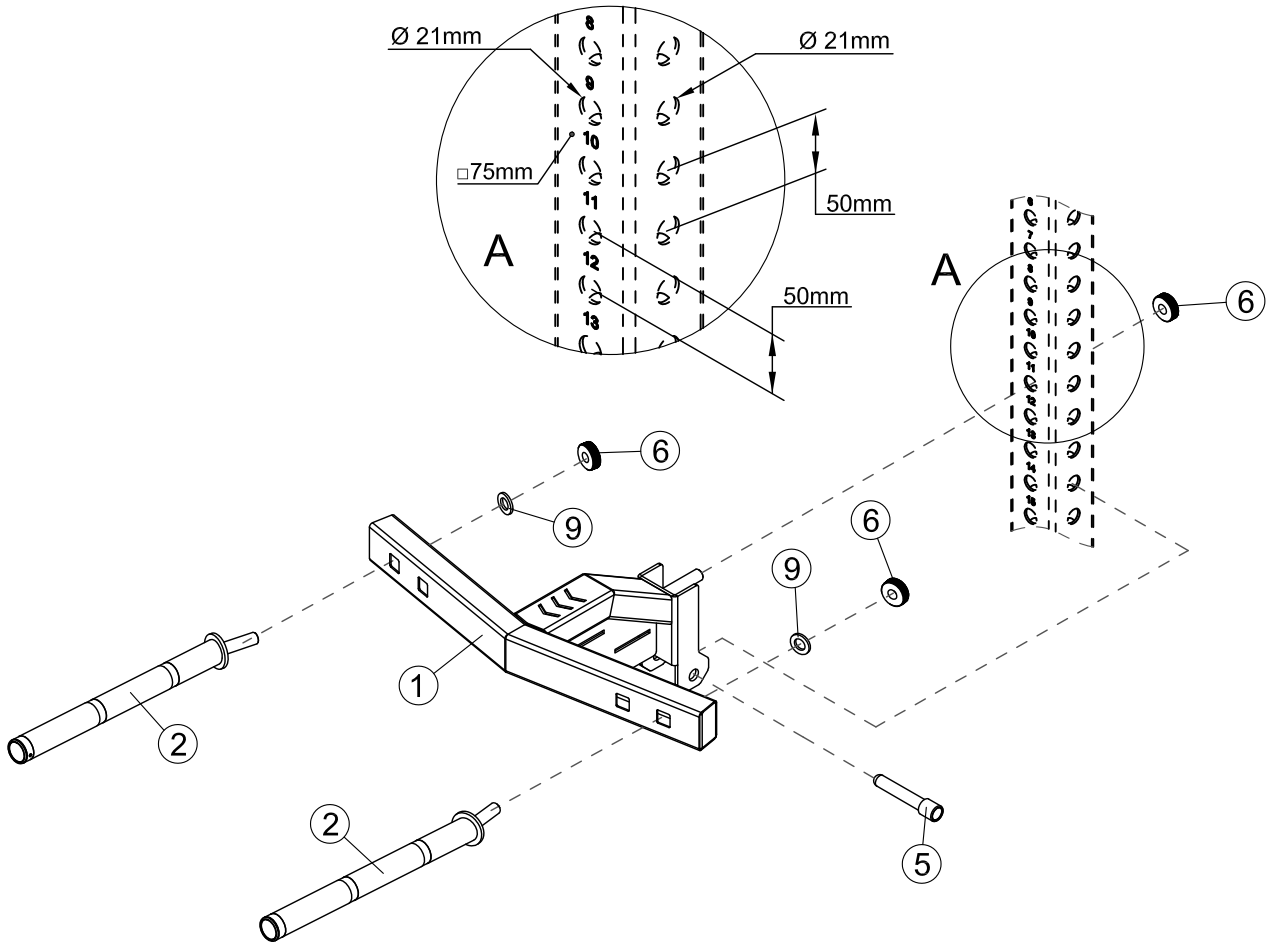

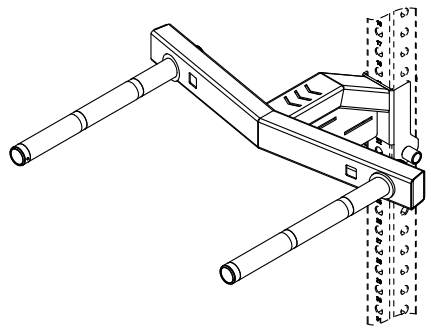

1

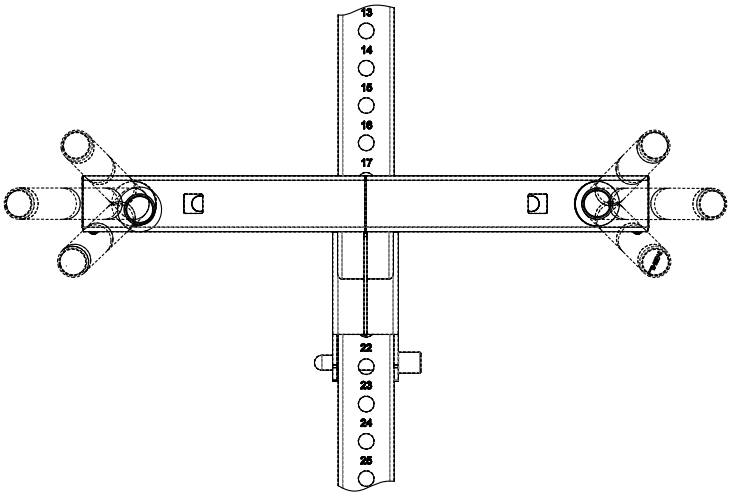
13
14
15
16
17
22
23
24
25

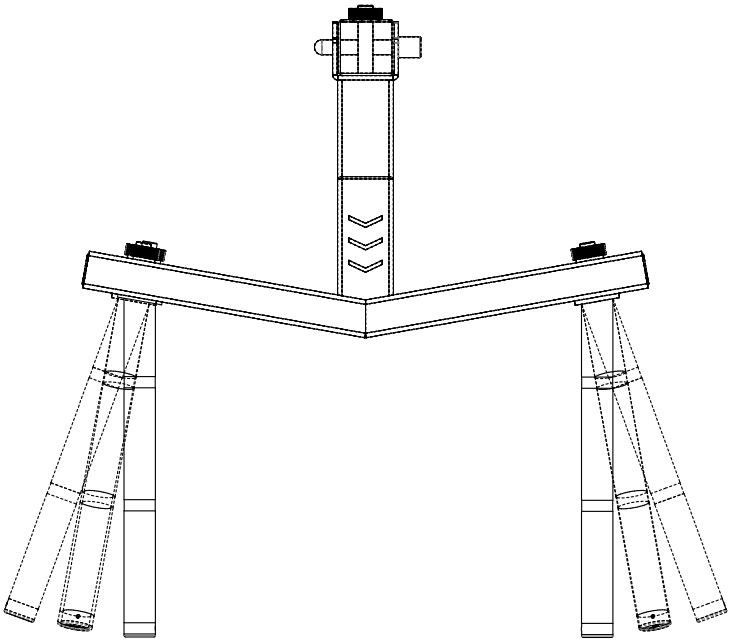

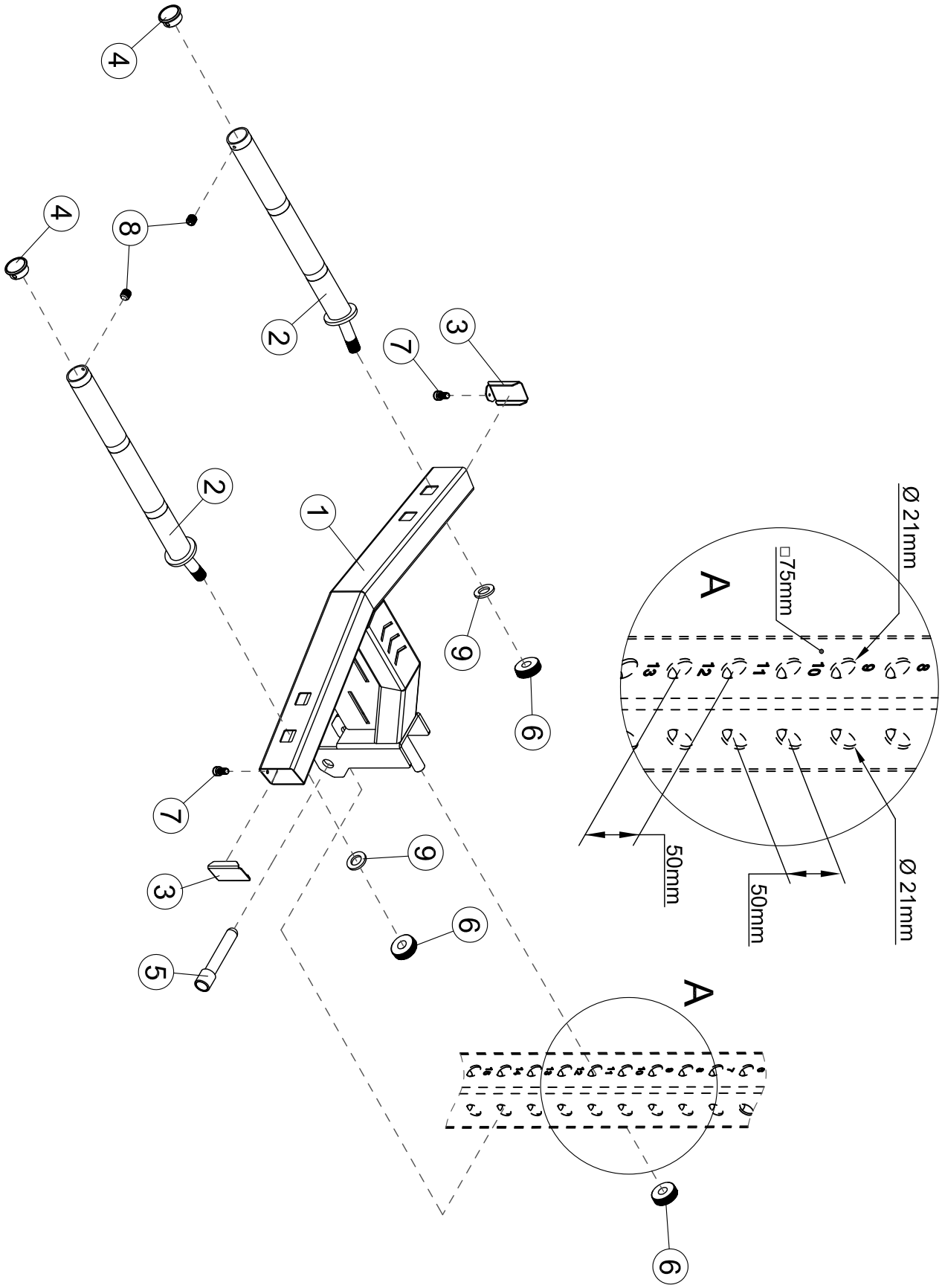
Ø 21mm
□75mm
A
50mm
50mm
Ø 21mm
A
1
2
2
3
3
4
4
5
6
6
6
7
7
8
9
9

PARTS LIST

KEY NO.	PART DESCRIPTION	SPEC	QTY
1	Support Frame		1
2	Parallel Bar Handlebars		2
3	Decorative cover	□50×75×2.5	2
4	Decorative cover	φ42×3	2
5	Magnetic Pin		1
6	Knurled nut	φ45×15×M20	3
7	Hexagon socket button head screws	M5×10	2
8	Set screw	M6×6	2
9	Washer	20	2