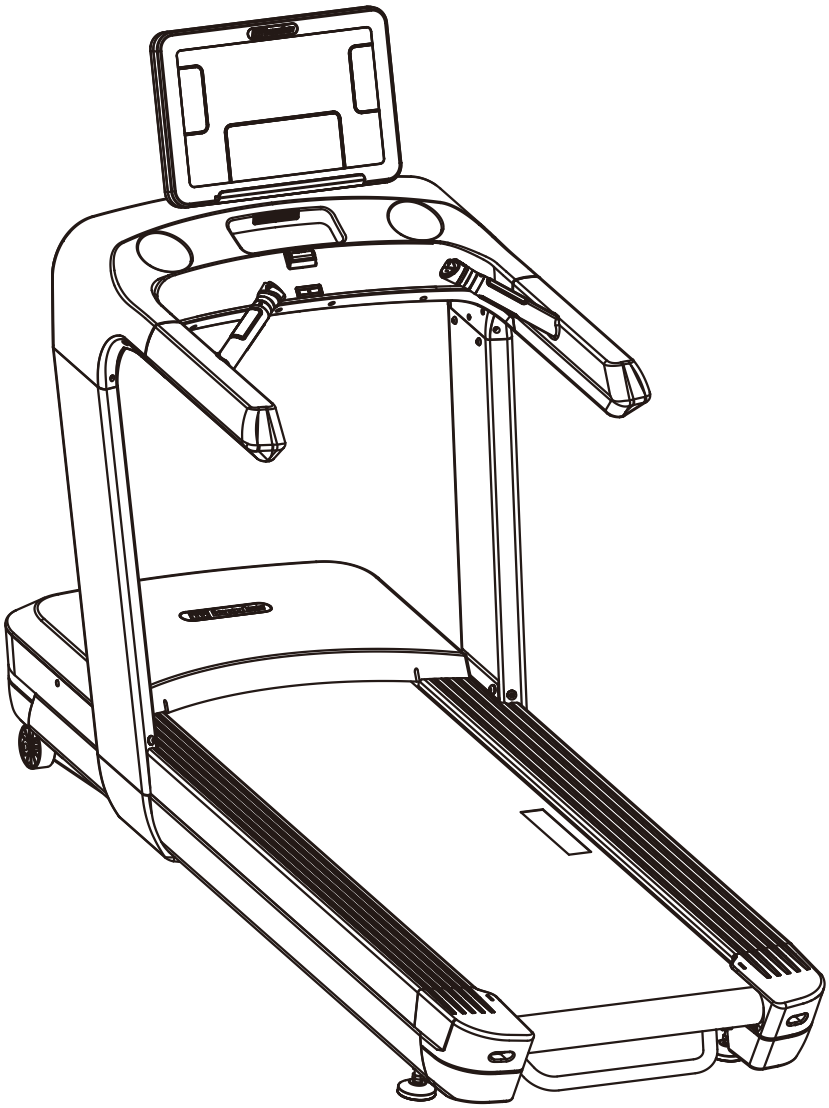

AC810

TREADMILL

OWNER'S MANUAL

24A

CAUTION! Read all precautions and instructions in this manual before using this equipment.

! CAUTION

Read all precautions and instructions in this manual before using this equipment.

Table Of Contents

Important Safety Instructions---------- 3

Main Parts List---------- 6

Warning---------- 7

Using Method---------- 8

Warm Up Exercises---------- 9

Power Requirements---------- 10

Console Information---------- 11

Moving Instructions---------- 12

Parts List and Exploded View---------- 13

Console Panel Functions---------- 28

Electrical Connection---------- 38

Belt Adjustment And Maintenance---------- 39

Maintenance Check List---------- 41

Important Safety Instructions

WARNING - Before using this treadmill or starting any exercise program, consult your physician. This is especially important for persons over the age of 35 and or persons with pre-existing health problems. The manufacturer or distributor assumes no responsibility for personal injury or property damage sustained by or through the use of this product. To reduce the risk of electrical shock, burns, fire, or other possible injuries to the user, it is important to review this manual and the following precautions before operation.

This appliance is not intended for use by persons (including children) with reduced physical, sensory or mental capabilities, or lack of experience and knowledge, unless they have been given supervision or instruction concerning use of the appliance by a person responsible for their safety.

Children should be supervised to ensure that they do not play with the appliance.

WARNING - Heart rate monitoring systems may be inaccurate. Over exercising may result in serious injury or death. If you feel faint stop exercising immediately.

SAFETY PRECAUTIONS AND TIPS

1. It is the owner's responsibility to ensure that all users of this treadmill have read the Owner's Manual and are familiar with warnings and safety precautions.
2. The treadmill should only be used on a level surface and is intended for indoor use only. The treadmill should not be placed in a garage, patio, or near water and should never be used while you are wet. Recommends a treadmill mat be placed under the treadmill to protect floor or carpet and for easier cleaning.
3. Follow safety information in regards to plugging in your treadmill. Keep the power cord away from the incline wheels and do not run the power cord underneath your treadmill. Do not operate the treadmill with a damaged or frayed power cord.
4. Wear comfortable, good-quality walking or running shoes and appropriate clothing. Do not use the treadmill with bare feet, sandals, socks or stockings.
5. Always straddle the belt and allow it to start moving before stepping onto the belt.

6. Hold on to handrail when adjusting speed, incline, or other controls.
7. Always examine your treadmill before using to ensure all parts are in working order.
8. Allow the belt to fully stop before dismounting.
9. Pets should never be allowed near or on the treadmill.
10. Do not leave children unsupervised near or on the treadmill.
11. Never operate the treadmill where oxygen is being administered, or where aerosol products are being used.
12. Never insert any object or body parts into any opening.
13. For safety and to prevent damage to your treadmill, no more than one person should use the treadmill at a time.
14. Always unplug the treadmill before cleaning and/or servicing. Service to your treadmill should only be performed by an authorized service representative, unless authorized and or instructed by the manufacturer.
15. Failure to follow these instructions will void the treadmill warranty.
16. If the supply cord is damaged, it must be replaced by the manufacturer or its service agent or a similarly qualified person in order to avoid a hazard.

Correct Disposal of this product	
	This marking indicates that this product should not be disposed with other household wastes throughout the EU. To prevent possible harm to the environment or human health from uncontrolled waste disposal, recycle it responsibly to promote the sustainable reuse of material resources. To return your used device, please use the return and collection systems or contact the retailer where the product was purchased. They can take this product for environmental safe recycling.

Important Safety Instructions

Remember to take the time to review owner's manuals before you start.

1. Before using this treadmill or starting any exercise program, consult your physician and accompanied by specialized person. Adjust the speed not over 8KMH.
2. Take the time to perform the stretching exercise provided to avoid injury.
3. If you have heart problems, and/ or the other diseases, do not use the treadmill programs without receiving approval from your physician.
4. Stop exercising or call physician if you feel uncomfortable.
5. Do not leave children unsupervised and disabled person near or on the treadmill. Should be accompanied by supervisors.
6. Running is oxygen exercise, recommended 30 minutes per time is reasonable.
7. Wear comfortable, good-quality walking or running shoes and appropriate clothing. Do not with fibre clothing to avoid electrical shock and damage the treadmill.
8. Do note us the treadmill with bare feet, sandals, socks of stockings to avoid any risk of injuries. Wear comfortable shoes or cotton socks.
9. Failure to follow these instructions will void the treadmill warranty.
10. If the supply cord is damaged, it must be replaced by the manufacturer or its service agent or a similarly qualified person in order to avoid a hazard.

Training Area and Free Area

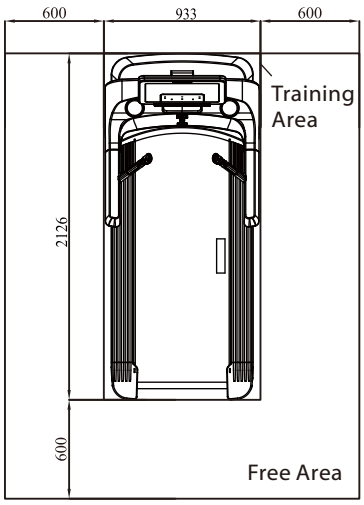

Technical Data

Class: SB

Product Dimensions: 2126*933*1598mm

Product Total Surface: 2126*933mm

Max. user weight: 150kg/ 330lbs

Product total mass:

Main parts list

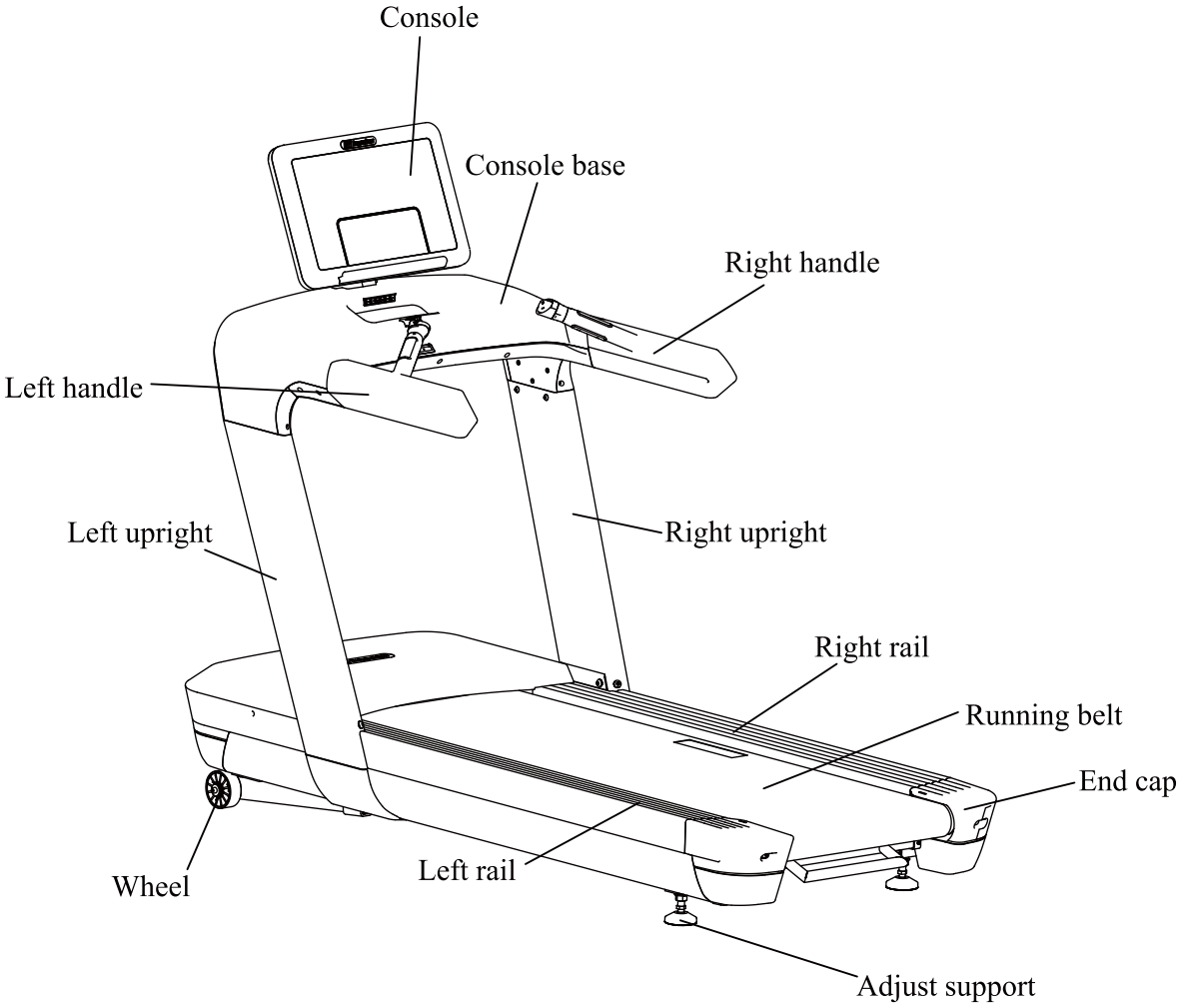

Warning

CAUTION! Before using this treadmill or starting any exercise program, It is important to review this manual and the following precautions.

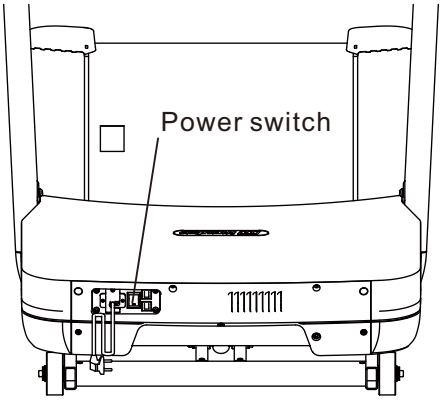

Precautions

1. Always unplug the treadmill after using to keep the life of treadmill and avoid any risk of injuries.
2. Power outlet over 16A(220V) must be used, and it must be properly erathed for not being shocked by electricity.
3. In order to protecting your treadmill, spattering water on the machine must be forbidden.
4. Maximum noise level around the treadmill is 72 dB(A). Noise emission under load is higher than without load.

Adjustment and Use remote controller

If the ground in user's house is not level, please adjust the adjust support properly which is marked as A in the below figure to make the machine at a level place. After adjusting tighten the hex nut by using the Double-ended spanner.

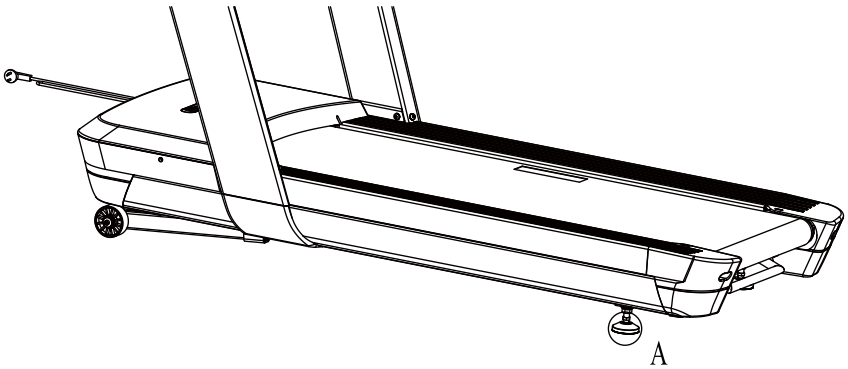

Using Method

Please read carefully and using follow the functions:

1. put the plug in the socket, turn on the switch.
2. grasp the handle firmly, stand on the treadmill.
3. Push red safety switch into the casing, tie the safety clip to your cloth, then start the treadmill for exercise.
4. you can operate this device according as the manual set the lowest speed, first then increase the speed gradually.
5. you should grasp the handle firmly by one hand, when you operating the console.
6. Take care to use treadmill. Start from low speed handed to the uprights leaving from treadmill after reducing speed and stopping all functions.
7. Haul the Safety clip linked with red wire on emergency.
8. Keep warm and relax your body after workout.

Exercise time and exercise frequency at a time:
Exercise time: 30minuates----Normal;
Exercise frequency: Warm your body by 10---20minutes under 8Kph,
then increase speed accordingly.

Safety Switch Introduction

When the treadmill is running, the user can press the stop switch directly if he wants to stop it. Then the treadmill will stop slowly. If the user encounters emergency when he using the treadmill he should haul the safety clip linked with red wire, it will triger the safety switch to step.

Warning: When use above methed to stop running, the running belt will last running for several seconds before completely stop.

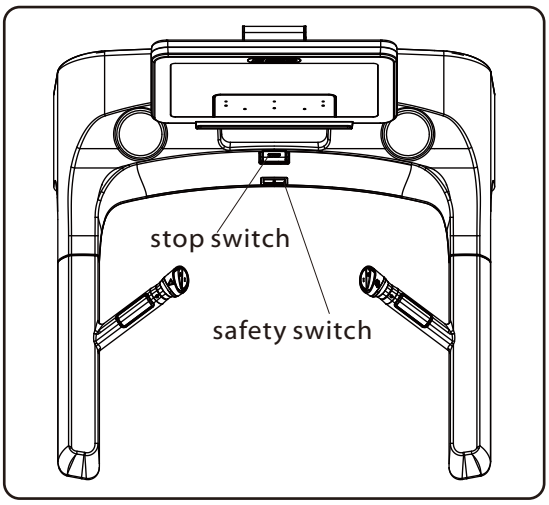

Warm Up Exercises

EXERCISE GUIDELINES

WARNING! Before beginning this or any exercise program, you should consult your physician. This is especially important for individuals over the age of 35 or individuals with pre-existing health problems.

Warming up prepares the body for the exercise by increasing circulation, supplying more oxygen to the muscles and raising body temperature. Begin each workout with 5 to 10 minutes of stretching and light exercise to warm up. The photos on this page show several forms of basic stretching you may perform before your workouts. In order to achieve an adequate warm-up, perform each stretch three times.

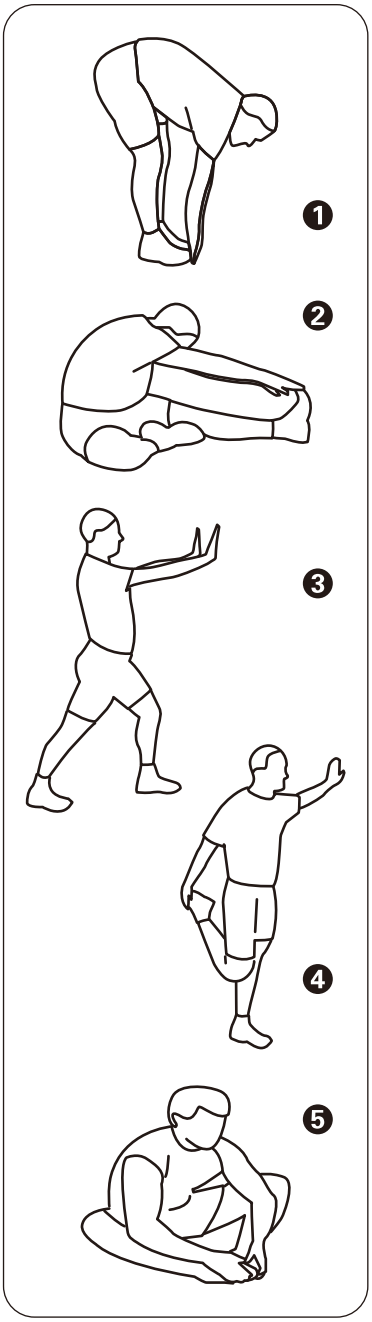

TOE TOUCH STRETCH

Stand, bending your knees slightly and slowly bend forward from your hips. Allow your back and shoulders to relax as you reach down toward your toes as far as possible. Hold for 15 counts, then relax. This will stretch your hamstrings, back of knees, and back.

HAMSTRING STRETCH

Sit with one leg extended. Bring the sole of the opposite foot toward you and rest it against the inner thigh of your extended leg. Reach toward your toes as far as possible. Hold for 15 counts, then relax. This will stretch your hamstrings, lower back, and groin.

CALF/ACHILLES STRETCH

With one leg in front of the other, reach forward and place your hands against a wall. Keep your back leg straight and your back foot flat on the floor. Bend your front leg, lean forward and move your hips toward the wall. Hold for 15 counts, then relax. To cause further stretching of the Achilles tendon, bend your back leg as well. This will stretch your calves, Achilles tendons, and ankles.

QUADRICEPS STRETCH

With one hand against a wall for balance, reach back and grasp one foot with your other hand. Bring your heel as close to your buttocks as possible. Hold for 15 counts, then relax. This will stretch your quadriceps and hip muscles.

INNER THIGH STRETCH

Sit with the soles of your feet together and your knees outward. Pull your feet toward your groin area as far as possible. Hold for 15 counts, then relax. This will stretch your quadriceps and hip muscles.

Power Requirements

IMPROPER CONNECTION OF THE EQUIPMENT GROUNDING CONNECTOR CAN RESULT IN A RISK OF AN ELECTRIC SHOCK. CHECK WITH A QUALIFIED ELECTRICIAN OR SERVICE MAN IF YOU ARE IN DOUBT AS TO WHETHER THE PRODUCT IS PROPERLY GROUNDED. DO NOT MODIFY THE PLUG PROVIDED WITH THE PRODUCT. IF PLUG WILL NOT FIT THE OUTLET, HAVE A PROPER OUTLET INSTALLED BY A QUALIFIED ELECTRICIAN.

This treadmill can be seriously damaged by sudden voltage changes in your home's electrical power. Voltage spikes, surges, and noise interference can result from weather conditions or from other appliances being turned on or off.

This treadmill must be grounded to reduce the risk of electrical shock. Grounding provides a path of least resistance for electric current should the treadmill malfunction. Always plug the power cord into an appropriate outlet that is properly installed and grounded in accordance with all local codes and ordinances.

Before beginning your workout, check your normal resting heart rate. Place your fingers lightly against your neck, or against your wrist over the main artery. After finding your pulse, count the number of beats in 10 seconds. Multiply the number of beats by six to determine your pulse rate per minute. We recommend taking your heart rate at these times; at rest, after warming up, during your workout and two minutes into your cool down, to accurately track your progress as it relates to better fitness.

During your first several months of exercising, the AHA recommends aiming for the lower part of the target heart rate zone-60%, then gradually pro-gressing up to 75%. According to the AHA, exercising above 75% of your maximum heart rate may be too strenuous unless you are in top physical condition. Exercising below 60% of your maximum will result in minimal cardiovascular conditioning.

Check your pulse recovery rate – If your pulse is over 100 bpm five minutes after you stop exercising, or if it's higher than normal the morning after exercising, your exertion may have been too strenuous for your current fitness level. Rest and reduce the intensity next time.

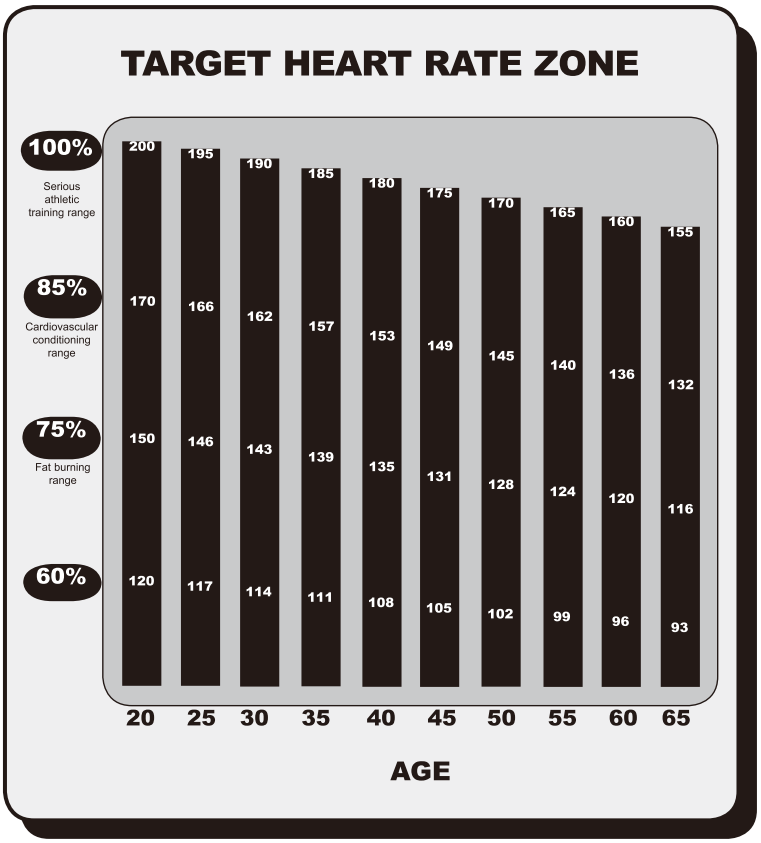

Fitness Safety The target heart rate chart indicates average rate zones for different ages. A variety of different factors (including medication, emotional state, temperature and other conditions) can affect the target heart rate zone that is best for you. Your physician or health care professional can help you determine the exercise intensity that is appropriate for your age and condition.

Moving Instructions

Caution! In order to protecting your treadmill, spattering water on the machine must be forbidden. To avoid the risk of injury, never attempt to move the treadmill while it is operating. To reduce the possibility of injury while lifting, bend your legs and keep your back straight. As you raise the treadmill, lift using your legs, not your back. In order to raise or lower the treadmill safely, you must be able to lift 220 pounds (100kg). It is suggested you always use the aid of a second person when moving the treadmill.

Lift the treadmill back then move it to the desired location. Carefully put down it on the position. Do not attempt to move the treadmill over an uneven or rough surface.

Note: The treadmill's angle can not exceed 25 degrees when lifted the treadmill back.

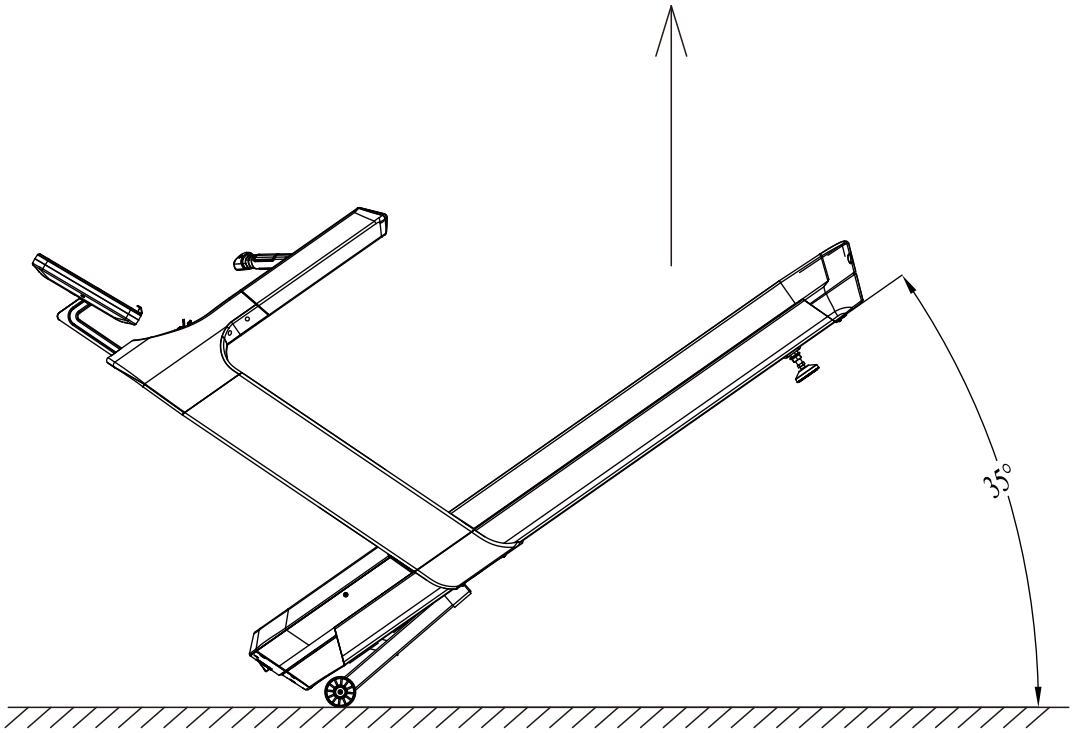

Console base frame

Grade No.	Part No.	Description	QTY
1.1	AC8000100	Console base frame	1
1.2	AC80064ASSY	Console base up cover	1
1.3	AC8002600	Console base down cover	1
1.4	AC8002700	Console base left cover	1
1.5	AC8002800	Console base right cover	1
1.6	AC80029ASSY	Console base left cover assy	1
1.7	AC80030ASSY	Console base right cover assy	1
1.8	AC80032ASSY	Emergency switch assy	1
1.9	AC8005300	Emergency switch assy	1
1.10	AC8005400	Console base right front cover	1
1.11	AC8002400	Console base front cover	1
1.12	AC8006200	Console base lower left cover	1
1.13	AC8006300	Console base lower right cover	1
1.14	AC8001600	Bottom guard plate	1
1.15	AC8003300	Air duct cover	1
1.16	AC80034ASSY	Right foam assembly	1
1.17	AC80035ASSY	Left foam assembly	1
1.18	AC29905200	Stop switch button	1
1.19	AC29905300	Stop switch fixing seat	1
1.20	E7DZB0800PBC	Fan blades	1
1.21	AC40005000	Cover side fixing plate	2
1.22	ECT74600	Plastic quick nut	26
1.23	PNLM8*15DHS20NL	Hexagonal pan head screws M8*15	10
1.24	GB845ST4.2*13DHS	Phillip Screw,ST4.2*13	71
1.25	TBT15100	Quick nut	6
1.26	GB845ST2.9*13DHS	Phillip Screw ST2.9*13	8
1.27	GB17880.3M5*13DS17	Countersunk Head Hexagon Riveted Nuts M5	9
1.28	GB818M5*15DHS20	Phillip Screw M5*15	11
1.29	AC80010ASSY	Fan assy	1
1.30	L850JDF-M43020-20-XH-9	Console middle wire	1
1.31	L350M43025-20-12	Middle control wire down	1
1.32	DQCH02-SBD	Ferrite	2
1.33	B320-ZK	Middle control board	1
1.34	DQCH01-SBD	Ferrite	1

Console base frame

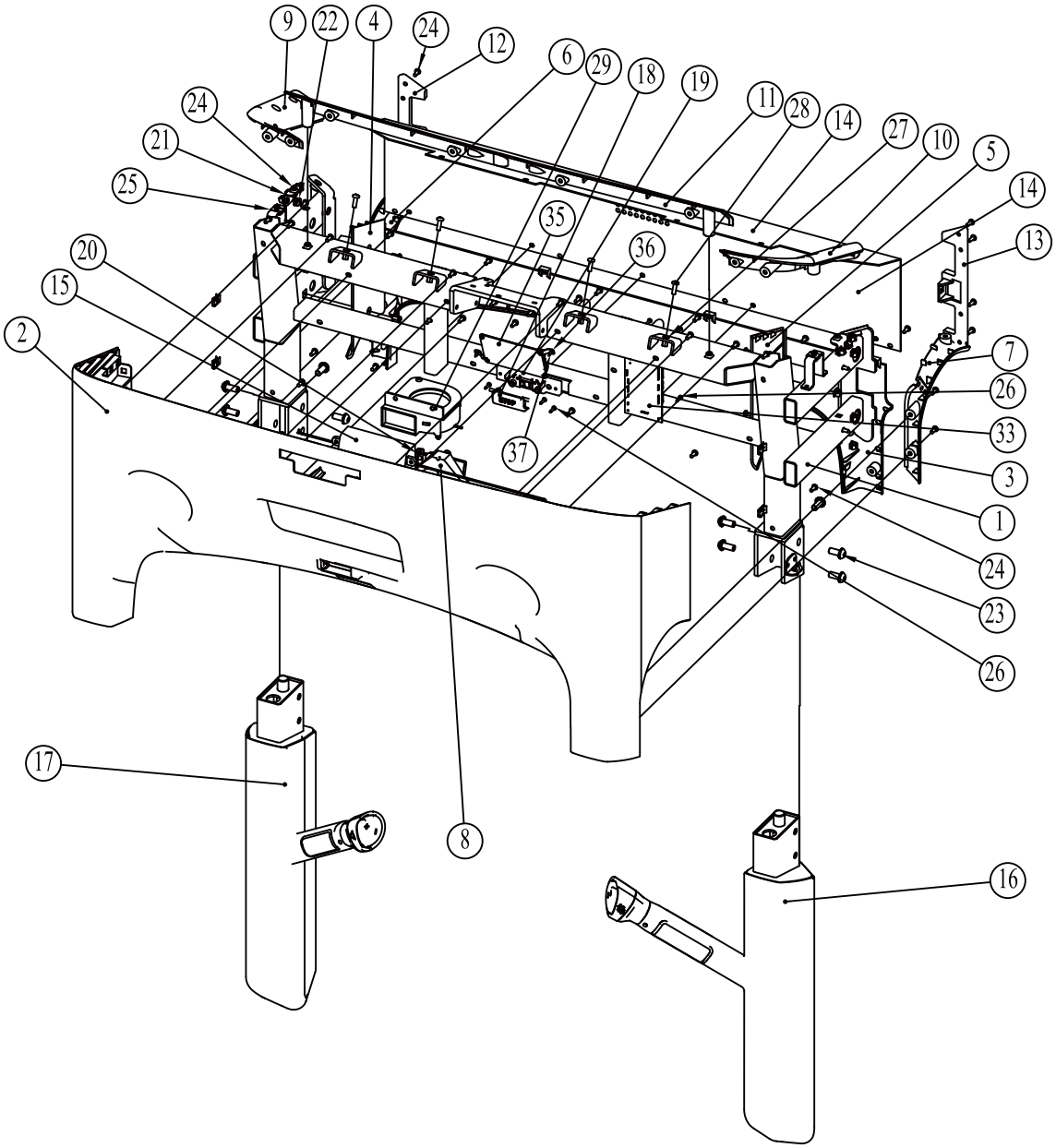

Emergency switch assy

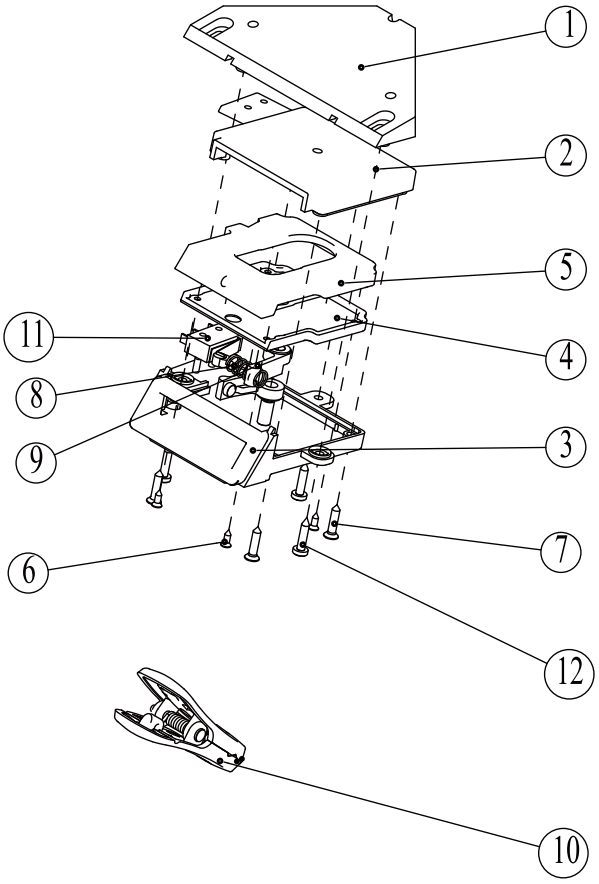

Grade No.	Part No.	Description	QTY
1.8.1	AC8003200	Emergency stop adapter fixed seat	1
1.8.2	AC29907400	Emergency stop switch lower seat	1
1.8.3	AC29907500	Emergency stop switch upper seat	1
1.8.4	AC29907600	Emergency switch cable upper cover	1
1.8.5	AC29907700	Emergency switch cable lower cover	1
1.8.6	GB846ST2.2*6.5DS	Phillip Screw,ST2.2*6.5	4
1.8.7	GB846ST2.9*13DS	Phillip Screw,ST2.9*13	4
1.8.8	RT7504900	Emergency switch pressure spring	1
1.8.9	RT7507800	Emergency switch positioning rod	2
1.8.10	STDP4012	Safety clip combination	1
1.8.11	F95S2-M35155-5	Emergency stop switch assembly	1
1.8.12	GB845ST2.9*13DHS	Phillip Screw,ST2.9*13	3

Right foam assembly

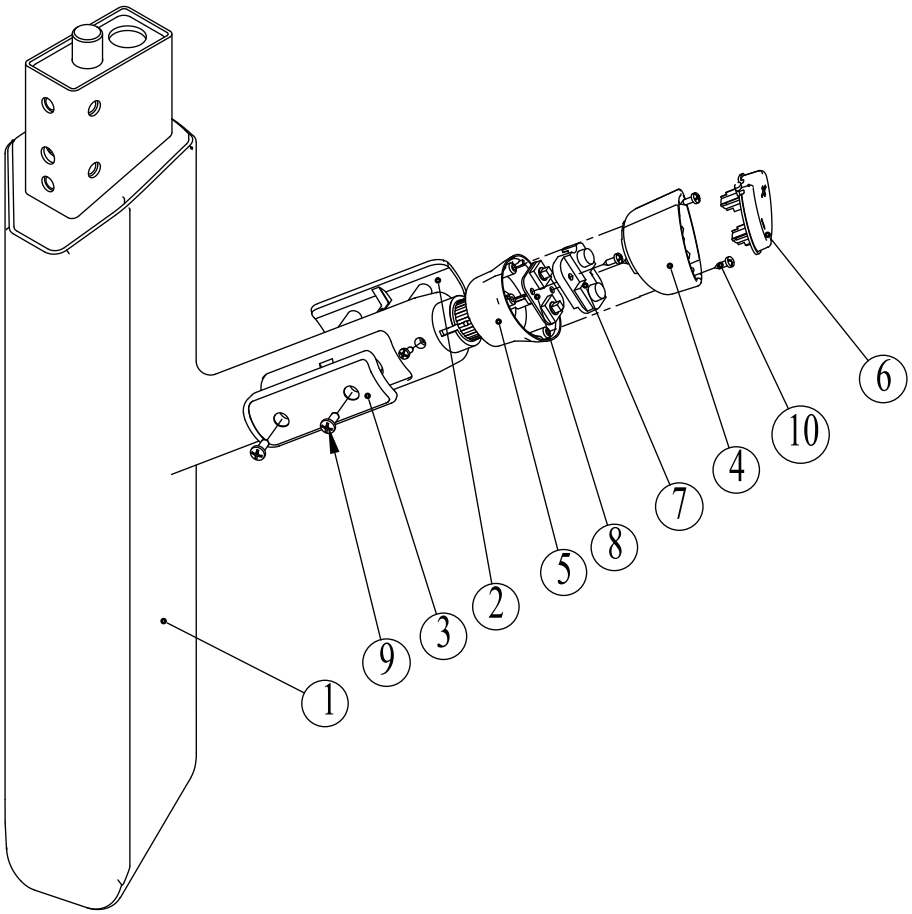

Grade No.	Part No.	Description	QTY
1.16.1	AC8003400	Right foam	1
1.16.2	AC8006600	Hand held heartbeat piece upper shell assy	1
1.16.3	AC8003900	Hand held heartbeat piece lower shell assy	1
1.16.4	AC8004000	Right speed button fixed seat upper cover	1
1.16.5	AC8004100	Right button	1
1.16.6	AC8004200	Right speed button fixing plate Lower cover	1
1.16.7	AC8006100	Speed waterproof rubber sleeve	1
1.16.8	F45-SP	Speed switch board	1
1.16.9	GB845ST4.2*13DHS	Phillip Screw,ST4.2*13	2
1.16.10	GB845ST2.9*9.5DHS	Phillip Screw,ST2.9*9.5	6
1.16.11	L1M35155-2	Hand held heartbeat wire	1
1.16.12	L1000M35155-55-3	Armrest switch wire	1

Left foam assembly

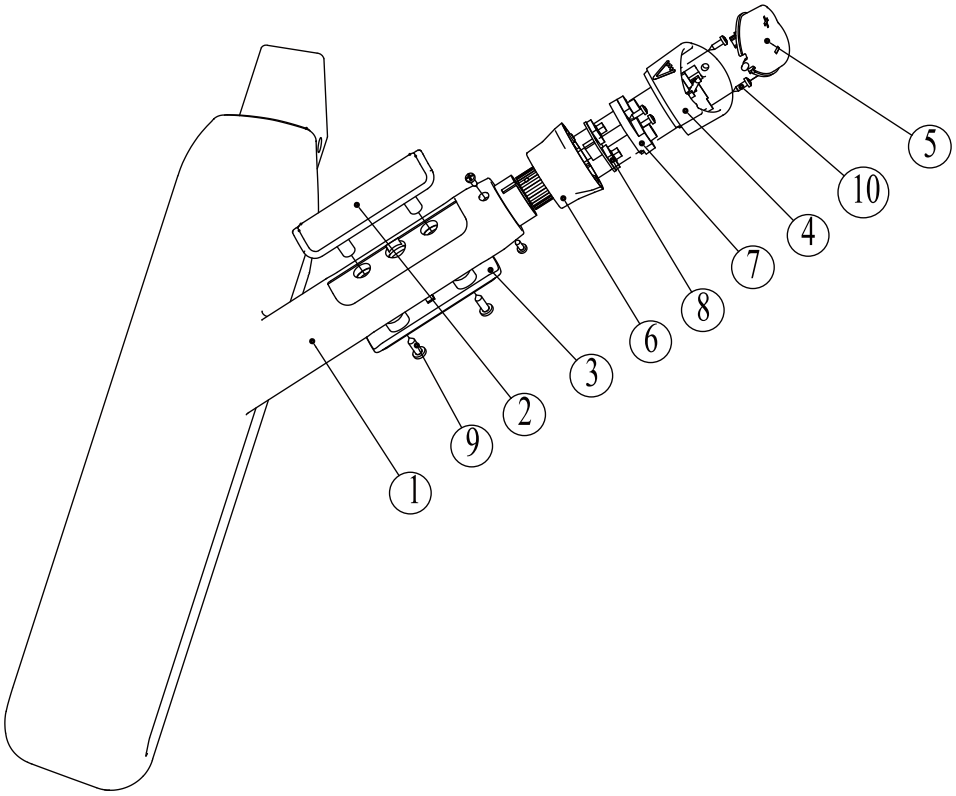

Grade No.	Part No.	Description	QTY
1.17.1	AC8003500	Left foam	1
1.17.2	AC8006600	Hand held heartbeat piece upper shell assy	1
1.17.3	AC8003900	Hand held heartbeat piece lower shell assy	1
1.17.4	AC8003600	Right speed button fixed seat upper cover	1
1.17.5	AC8003700	Left button	1
1.17.6	AC8003800	Left incline button fixing plate Lower cover	1
1.17.7	AC8006000	Speed waterproof rubber sleeve	1
1.17.8	F46-IN	Incline switch board	1
1.17.9	GB845ST4.2*13DHS	Phillip Screw,ST4.2*13	2
1.17.10	GB845ST2.9*9.5DHS	Phillip Screw,ST2.9*9.5	6
1.17.11	L1300M35155-ST018705-2	Hand held heartbeat wire	1
1.17.12	L1400M35155-55-3	Armrest switch wire	1

Console Frame

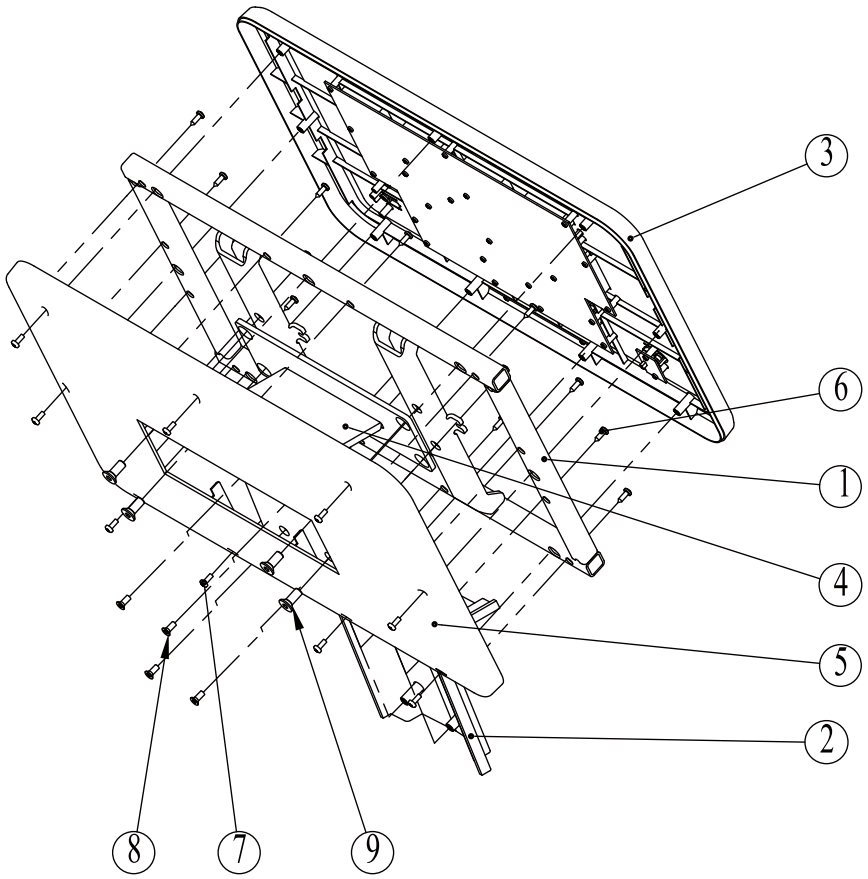

Grade No.	Part No.	Description	QTY
2.1	AC8000200	Console Frame	1
2.2	AC8002000	Wire cover	1
2.3	AC81022ASSY	Console front cover assy	1
2.4	AC8002300	Console back cover	1
2.5	AC8000700	Console frame fixing plate weld	1
2.6	GB845ST4.2*13DHS	Phillip Screw,ST4.2*13	14
2.7	GB818M4*10DHS2	Phillip Screw M4*10	9
2.8	GB819M5*12DHS2	Phillip Screw,M5*12	4
2.9	CNLM8*20DHS20	Hexagonal countersunk head screws M8*20	4

Console front cover assy

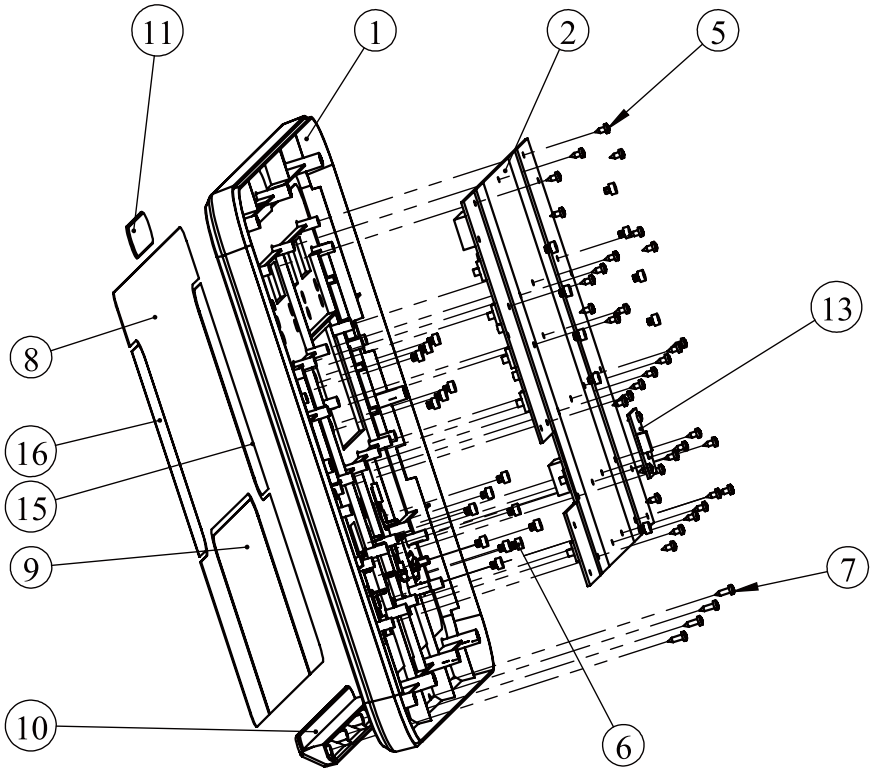

Grade No.	Part No.	Description	QTY
2.3.1	AC8002200	Console front cover	1
2.3.2	B326-WX	PCB:Console	1
2.3.3	L700M43025-25-9JD	Console wire up	1
2.3.4	L400M43025-25-12	Middle control wire up	1
2.3.5	GB845ST2.9*6.5DS	Phillip Screw,ST2.9*6.5	34
2.3.6	ECT74800	Cushion:TPU	24
2.3.7	GB845ST2.9*9.5DHS	Phillip Screw,ST2.9*9.5	4
2.3.8	AC810MM01	Console overlay 1	1
2.3.9	AC800MM02	Console overlay 2	1
2.3.10	AC8002100	PAD bracket	1
2.3.11	IMPULSELOGOMP01	LOGO	1
2.3.12	DQLY01	Bluetooth module	1
2.3.13	B294	Bluetooth adapter board	1
2.3.14	L200M35155-PH-4A	Bluetooth board connection cable	1
2.3.15	AC800MM03	Incline overlay	1
2.3.16	AC800MM04	Speed overlay	1

Main ASSY

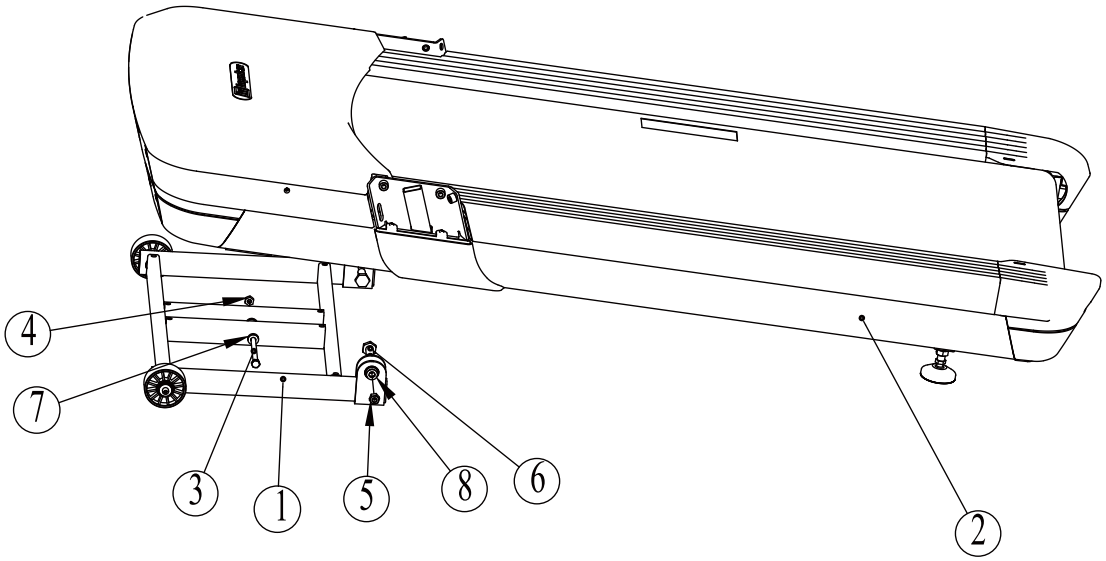

Grade No.	Part No.	Description	QTY
7.1	AC80006ASSY	Elevating Frame ASSY	1
7.2	AC81005WXASSY	Frame ASSY	1
7.3	GB5780M10*130DS20	Hex Head Bolt M10*130	1
7.4	NM10DS2	Lock Nut M10	1
7.5	RT7001900	Elevating Frame Fixing Shoulder Bolt	2
7.6	DQ10DS2A	Washer Φ11*Φ23*2	2
7.7	NM12DS2	Lock Nut M12	2
7.8	DQ12DS2A	Washer Φ13*Φ24*1.5	2

Fan assy

Elevating Frame ASSY

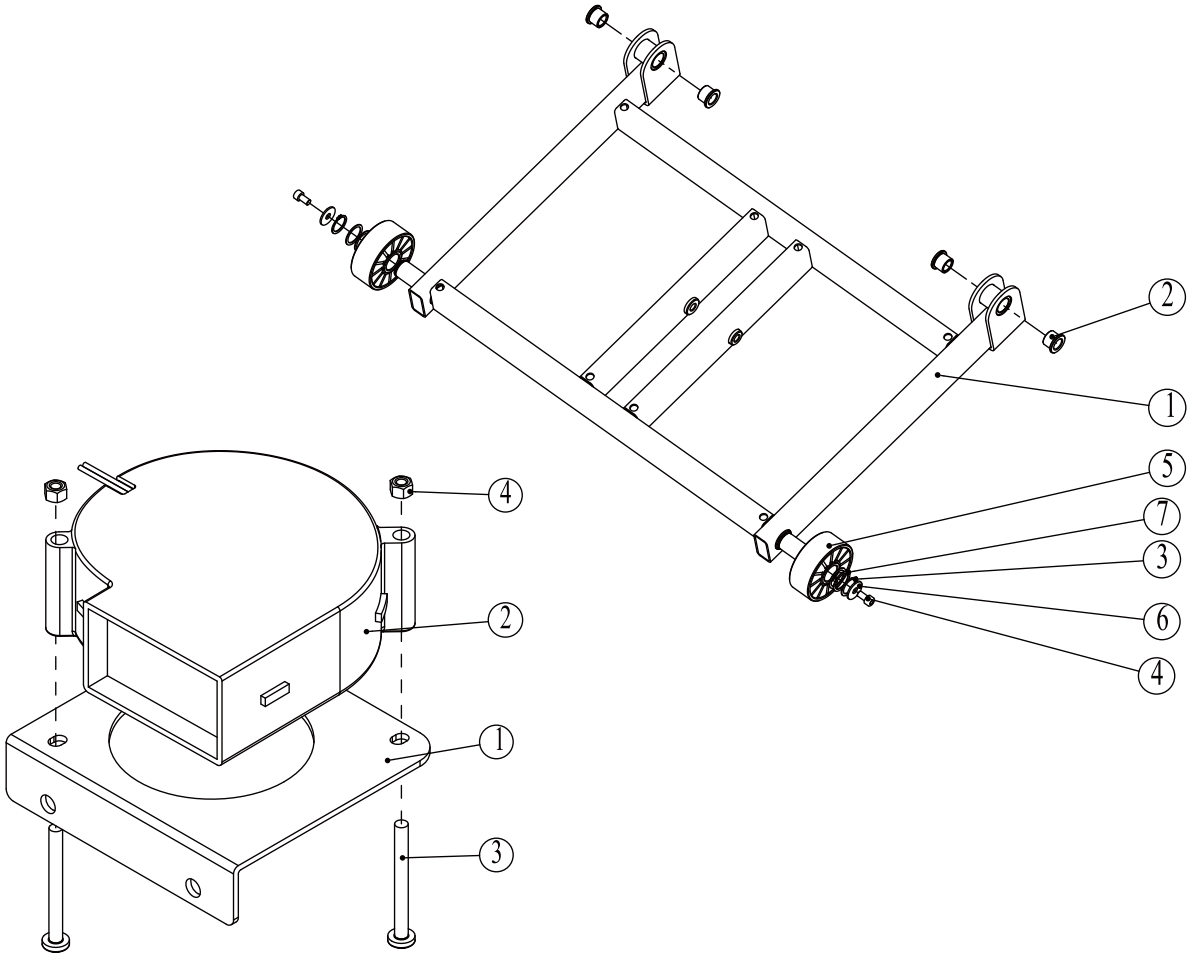

Grade No.	Part No.	Description	QTY
1.29.1	PT300H6101	Fan fixing plate	1
1.29.2	P07	Fan	1
1.29.3	GB818M4*40DS2	Phillip Screw M4*40	2
1.29.4	GB41M4DS2	Nut M4	2

Grade No.	Part No.	Description	QTY
7.1.1	AC8000600	Elevating Frame	1
7.1.2	L1-6800	Neck bush	4
7.1.3	GB894.125FH12	Ring-Shield,Φ25	2
7.1.4	GB70M8*15DHS4	Scoket Head Cap Screw M8*15	2
7.1.5	DC29002200	Wheel	2
7.1.6	DQ8DHS2B	Washer Φ9*Φ22*2	2
7.1.7	DQ25DHS2B	Washer Φ25	4

Motor ASSY

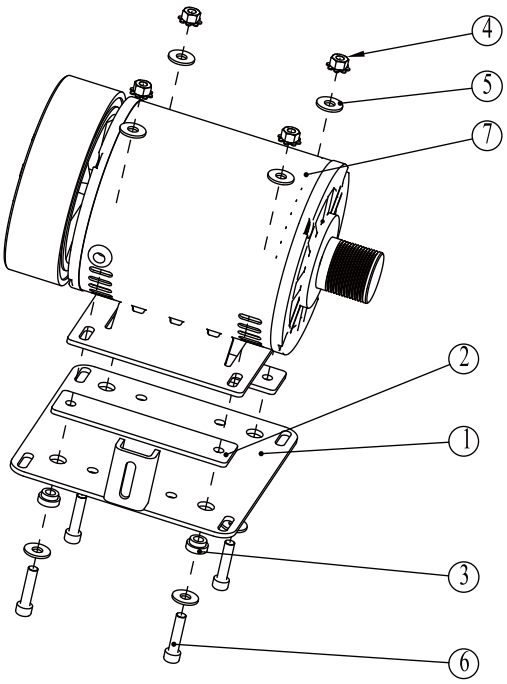

Motor Cover assy

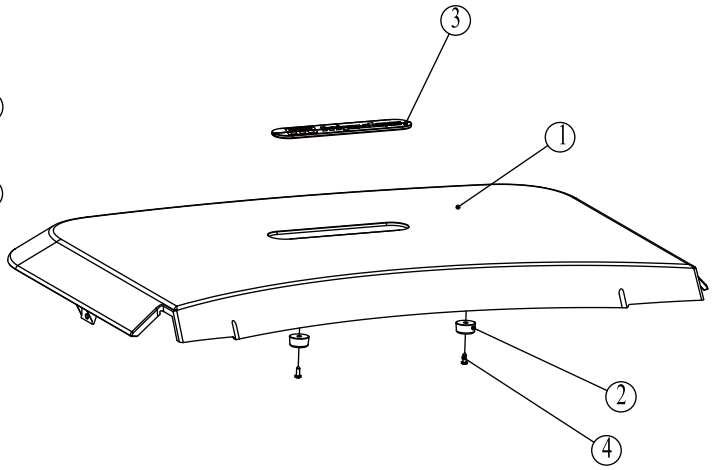

Grade No.	Part No.	Description	QTY
7.2.2.1	AC8000800	Motor Fixing Plate	1
7.2.2.2	AC8005900	Insulation Bumper	2
7.2.2.3	STDP3600	Insulation Spacer	4
7.2.2.4	STDP6800	Hex K nut M8	4
7.2.2.5	DQ8DHS2A	Washer Φ 9* Φ 22*2	8
7.2.2.6	GB70M8*35DS20	Scoket Head Cap Screw M8*35	4
7.2.2.7	D40-42C-ZH-1	Motor	1

Grade No.	Part No.	Description	QTY
7.2.7.1	AC8004300	Motor cover	1
7.2.7.2	GT300B5800	Bumper	2
7.2.7.3	XSC70085ASSY	LOGO	1
7.2.7.4	GB845ST4.2*13DHS	Phillip Screw,ST4.2*13	2

Left Side Rail ASSY

Right Side Rail ASSY

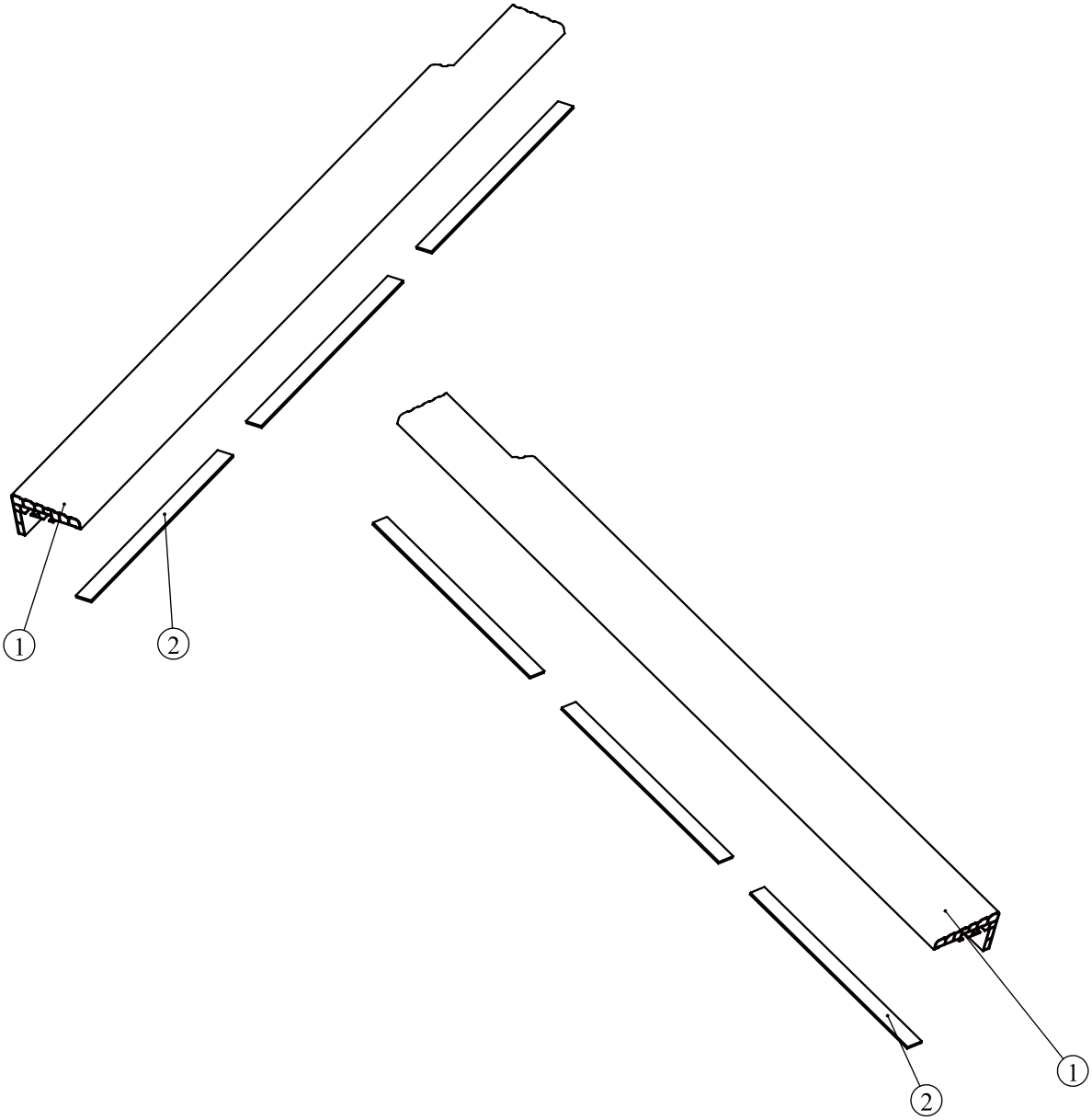

Grade No.	Part No.	Description	QTY
7.2.22.1	AC8004700	Left rail	1
7.2.22.2	PT300H5200	EVA	3

Grade No.	Part No.	Description	QTY
7.2.23.1	AC8004800	Right rail	1
7.2.23.2	PT300H5200	EVA	3

Frame ASSY

Grade No.	Part No.	Description	QTY
7.2.1	AC8000500	Frame	1
7.2.2	AC80008ASSY	Motor ASSY	1
7.2.3	AC8001400	Front Roller	1
7.2.4	AC8001500	Rear Roller	1
7.2.5	AC8001700	Running Belt	1
7.2.6	AC8001800	Running Board	1
7.2.7	AC80043ASSY	Motor Cover assy	1
7.2.8	AC8004400	Front cover	1
7.2.9	AC8004500	Left cover	1
7.2.10	AC8004600	Right cover	1
7.2.11	AC8004900	Left End Cap	1
7.2.12	AC8005000	Right End Cap	1
7.2.13	AC8005100	Left upright cover	1
7.2.14	AC8005200	Right upright cover	1
7.2.15	AC8005800	Rail fixing parts	10
7.2.16	AC8007000	Socket fixing plate	1
7.2.17	AC8007100	Motor cover fixing plate 1	2
7.2.18	AC8007200	Motor cover fixing plate 2	1
7.2.19	AC8007300	Motor cover fixing plate 3	1
7.2.20	AC8007400	Motor cover fixing plate 4	2
7.2.21	AC8007500	Motor cover fixing plate 5	2
7.2.22	AC80047ASSY	Left Side Rail ASSY	1
7.2.23	AC80048ASSY	Right Side Rail ASSY	1
7.2.24	RT7001800	Controller U Fixing Plate	1
7.2.25	RT7003000PBC	Switch Fixing Cover	1
7.2.26	PT3002800P294U	Bumper A	6
7.2.27	PT3002900P294U	Bumper B	4
7.2.28	AC32701801	Controller baffle	1
7.2.29	STDP6800	Hex K nut M8	17
7.2.30	GB6177M16DS2	Hex flange nut M16	2
7.2.31	AC32700636	Washer	4
7.2.32	STDP2800	Actuator Antivibration Pad	1
7.2.33	STDP3400	Adjust Bumper	2
7.2.34	DXD240J10A	Poly-v Belt,240J10	1
7.2.35	GB70M8*105*40DHS18	Scoket Head Cap Screw M8*105*40	1
7.2.36	GB845ST4.2*13DHS	Phillip Screw ST4.2*13	52
7.2.37	GB845ST4.2*16DHS	Phillip Screw ST4.2*16	4

Frame ASSY

Grade No.	Part No.	Description	QTY
7.2.38	TBT15100	Quick nut	10
7.2.39	GB17880.3M5*13DS17	Countersunk Head Hexagon Riveted Nuts M5	8
7.2.40	800SSC1100	Rubber gasket	2
7.2.41	CNLM8*35DHS20	Hexagon socket countersunk head cap head screw M8*35	6
7.2.42	CNLM8*45DN20	Hexagon socket countersunk head cap head screw M8*45	2
7.2.43	GB818M5*15DHS20	Phillip Screw M5*15	16
7.2.44	GB6560M4*8DSG	Phillip Screw M4*8	4
7.2.45	FLPSR-5500	Teflon Washer	2
7.2.46	GB5780M10*50DS20	Hex Head Bolt M10*50	1
7.2.47	NM10DS2	Lock Nut M10	1
7.2.48	GB70M10*40DHS20	Scoket Head Cap Screw M10*40	1
7.2.49	GB70M10*115*115DHS18	Scoket Head Cap Screw M10*115*115	2
7.2.50	GB70M6*15DHS4	Scoket Head Cap Screw M6*15	4
7.2.51	GB862.24DS12	Serrated Lock Washers Φ4	4
7.2.52	GB818M3*10DS2	Phillip Screw M3*10	2
7.2.53	GB41M3DS2	Nut,M3	2
7.2.54	Z13	Power Outlet	1
7.2.55	L100AMP175022-1-L-14	Connect wire	2
7.2.56	L100AMP175022-1-N-14	Connect wire	2
7.2.57	L350AMP175022-JD-1	Earth wire	1
7.2.58	DQCH01-SBD	Ferrite	2
7.2.59	F23	Main switch	1
7.2.60	08-0004	Circuit break SWITCH	2
7.2.61	L350M5557-57-8M	Connect wire	1
7.2.62	DQBPQ223-22-Y00	Inverter Assy	1
7.2.63	SPQ2AM3-BPQ	Adapter	1
7.2.64	R15A-22M-RDS	Actuator	1
7.2.65	L1600M43025-25-5557-9JD	Console wire down	1
7.2.66	DQCH02-SBD	Ferrite	1
7.2.67	SD4*150	Strap	7
7.2.68	SDZ21	Strap seat	7
7.2.69	SD2.5*75	Strap	4
7.2.70	CHP-2	Wire harness fixing seat	6
7.2.71	Q03	Filter	1
7.2.72	Q11-GM	Inductance	1
7.2.73	L250AMP175022-1-L-14	Connect wire	1
7.2.74	L250AMP175022-1-N-14	Connect wire	1

Frame ASSY

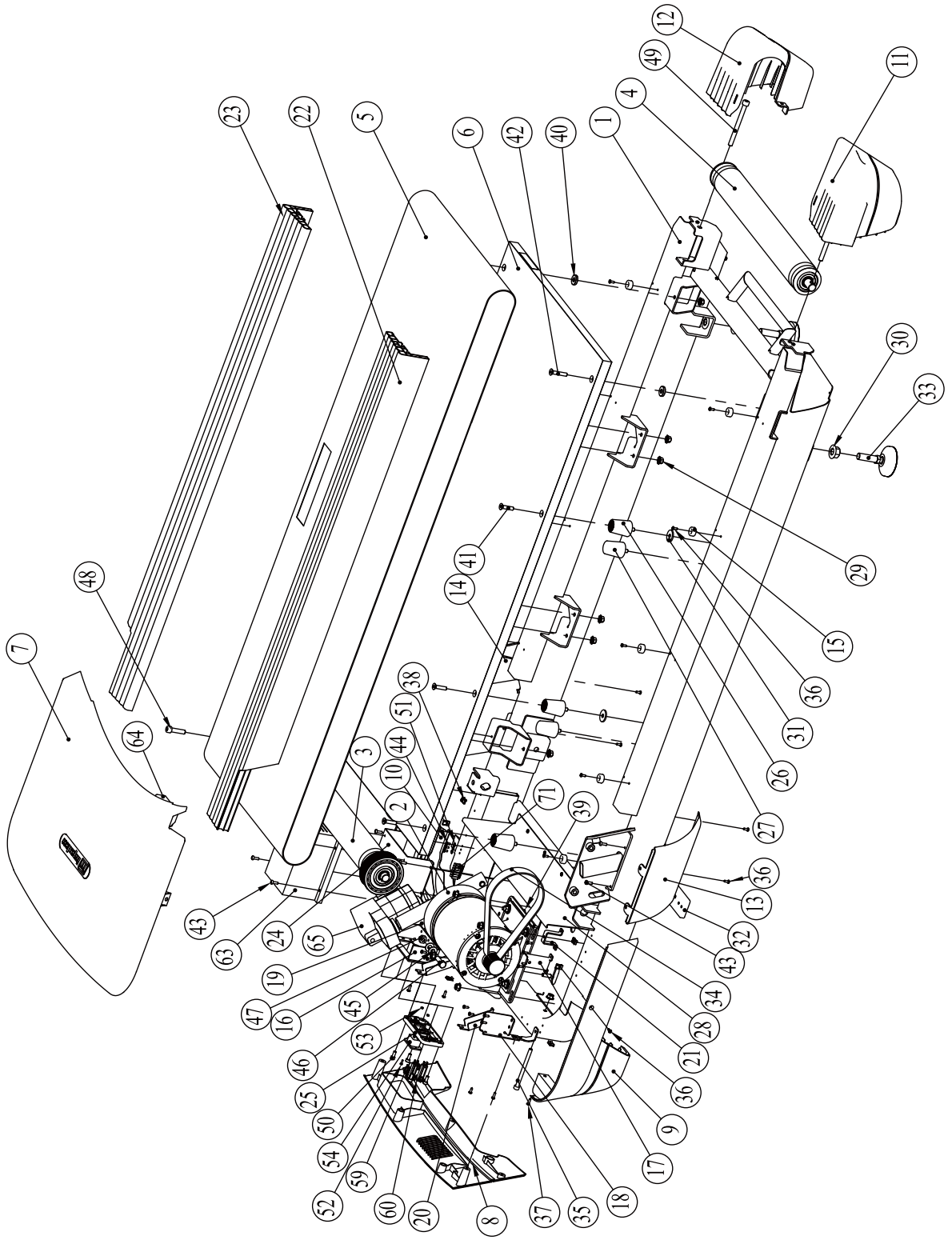
12
49
11
4
1
40
42
6
5
22
23
30
33
29
15
36
31
26
27
41
14
48
7
64
38
51
44
10
3
2
71
39
36
13
32
43
34
28
21
36
9
17
18
35
37
8
20
60
52
59
54
50
25
46
53
45
16
47
19
65
24
63
43

General ASSY

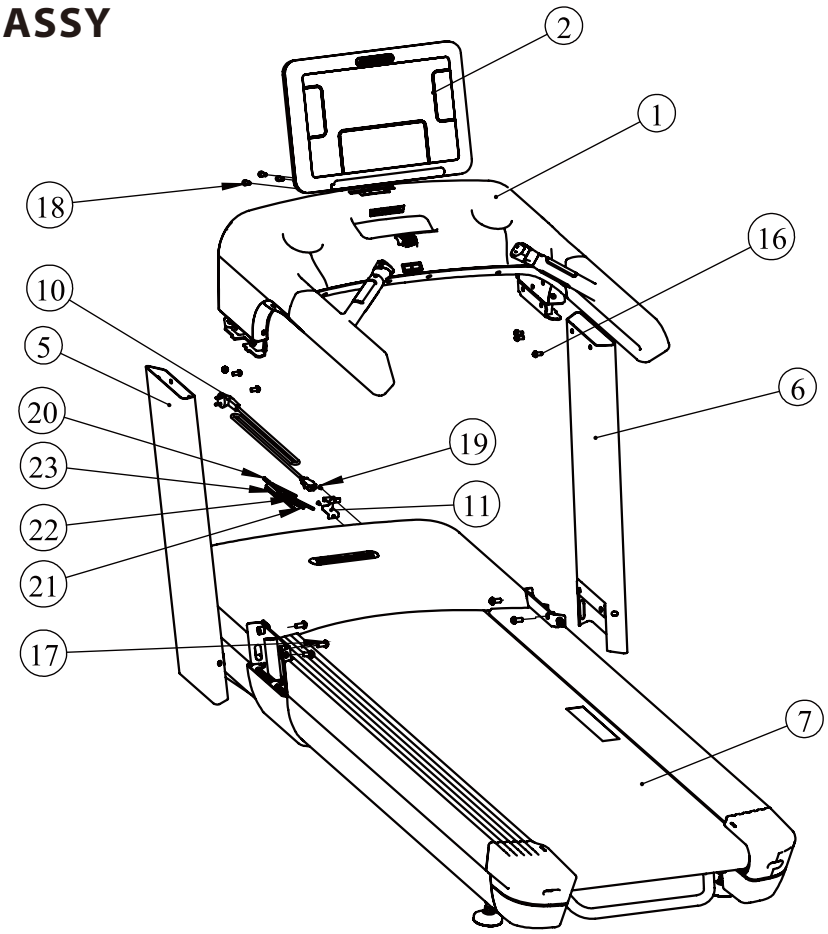

Grade No.	Part No.	Description	QTY
1	AC81001WXASSY	Console Base ASSY	1
2	AC81002ASSY	Console ASSY	
5	AC8000300	Left Upright	
6	AC8000400	Right Upright	
7	AC81009ASSY	Main ASSY	
10	A01-6	Power Cord	1
11	AC2970C1100V1	Power cord fixing plate	1
16	PNLJCM8*20DHS19	Hexalobular Socket Pan Head Tapping Screws W/ Serrated Lock Washer M8*20	6
17	PNLJCM10*25DHS18	Hexalobular Socket Pan Head Tapping Screws W/ Serrated Lock Washer M10*25	6
18	GB70M8*20DHS20NL	Scoket Head Cap Screw M8*20	3
19	GB818M4*10DHS2	Phillip Screws M4*10	2
20	NBS6DHS	Allen Wrench S=6	1
21	NBS8DHS	Allen Wrench S=8	1
22	NBS5DHS	Allen Wrench S=5	1
23	SS75*5	Phillips screwdriver	1

Console Panel Functions

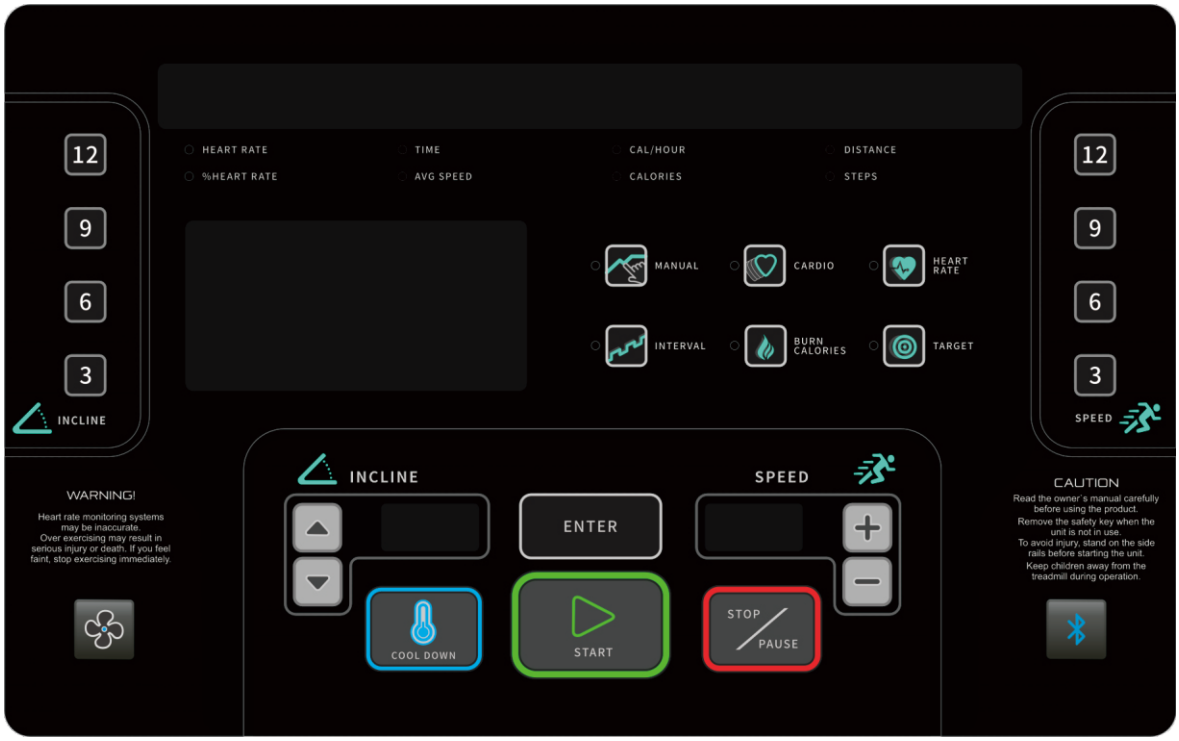

Rated voltage	AC 220-240V 50/60Hz
Rated power	2300W
Speed range	1.0-20.0km/h
Incline range	0-20%
Display	HEART RATE, % HEART RATE, TIME, TVG SPEED, CAL/HOUR, CALORIES, DISTANCE, STEPS, SPEED, INCLINE, DOT MATRIX (16*32).

KEY BEHALF FUNCTION

Key Name	Function
START	Press once when outside of a program Upper LED displays "3","2","1" Belt starts moving.
STOP / PAUSE	1. Press the button and speed will drop to 0, every other window remains un-changed. Press "START" within 30s, exercise continues. If not press "START", the treadmill resets. 2. Press STOP button of A-ZONE for 3 seconds to reset.
COOL DOWN	This button is used select workout "cool down mode".
SPEED+ and SPEED-	1. These buttons are used to adjust the speed of the treadmill during workout. 2. These buttons are also used to adjust the values when setting up your workout. 3. Press speed "+" button and "–" button, parameter value changed during setting parameter.
INCLINE+ and INCLINE-	1. These buttons are used to adjust the incline of the treadmill during workout. 2. These buttons are also used to adjust the values when setting up your workout.
Speed instant: 3,6,9,12	3,6,9,12 go to selected speed directly.
Incline Instant: 3%,6%,9%,12%	3%,6%,9%,12% go to selected incline angle directly.
ENTER	1. Press ENTER to confirm the program selected. 2. Press ENTER to confirm parameter value.
MANUAL	Press to select MANUAL mode.

Console Panel Functions

Key Name	Function
CARDIO 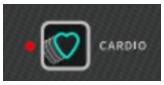	Press to select CARDIO mode.
HEART RATE	Press to select HEART RATE mode: user can select three modes 65%HR, 75%HR, 85%HR.
INTERVAL	Press to select INTERVAL mode.
BURN CALORIES	Press to select BURN CALORIES.
TARGET 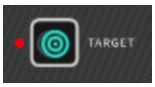	Press to select TARGET mode, user can select three target training, time/ calories/ distance target.
FAN	Press to turn on/off and adjust the fan.
Bluetooth key	Press this key to turn on Bluetooth 1. When you press the "Bluetooth key" to turn on Bluetooth, the dot-matrix screen will display the name of the Bluetooth module built into the watch. 2. If there is an app connection, the app is connected. 3. After ten seconds, if there is a Bluetooth heart rate band, connect the Bluetooth heart rate band. 4. Hold down the Bluetooth key for 5 seconds to connect to ANT+.

DISPLAY FUNCTION

Window Name	Function
SPEED	The SPEED for the workout in km/h format.
INCLINE	The incline of running deck, range from 0-20%.
HEART RATE\ % HEART RATE	1. HEART RATE window displays the user's current heart rate (beats per minute). 2. % HEART RATE window displays the user's maximum ratio of heart rate. 3. The values is updated by every 5s.
TIME\ AVG SPEED	1. The elapsed time for the workout in MM:SS format, range from 0-99:59. Displays the malfunctions code when equipment has fault. 2. AVG SPEED displays the average speed of the user's workout. 3. The values is updated by every 5s.
DISTANCE\ STEPS	1. The distance, in km, the user has "traveled" in the given workout. 2. The STEPS, The amount of the user's steps. 3. The values is updated by every 5s.
CAL/HOUR\ CALORIES	1. The CAL/HOUR, in kcal/h, The amount of calories per hour the user has burned. 2. The CALORIES, in Kcal, The amount of calories the user has burned through the workout. 3. The values is updated by every 5s.
Dot matrix	1. When console turns on or after reset: The central LED windows display "IMPULSE" logo for 3 seconds. Then windows scrolls "PRESS ▸ OR SELECT PROGRAM TO BEGIN". 2. When treadmill run, the LED windows simulate a 400 meters long runway. The flashing light indicates the amount of distance that use has run. 3. Displays messages when parameter setting. 4. Displays the icon of selected program.

WORKOUT SETUP STEPS

1. Quick start mode

1.1 Plug into surge protector outlet.
1.2 Turn on power.
1.3 he LED screen scrolls "PRESS ▶ TO QUICK START OR SELECT PROGRAM TO LAUNCH".
1.3.1 Press START, The LED displays "3","2","1", Belt starts moving.
1.3.2 Users can select buttons of Manual, Cardio, Heart Rate, Interval, Burn Cardio, Target to enter programs.
1.4 Press STOP button belt will stop.

2. Program mode

Users can select buttons of Manual, Cardio, Heart Rate, Interval, Burn Cardio, Target to enter different programs and adjust the parameter values.

1. If Manual is selected:

1.1 LEFT LED scrolls "MANUAL MODE: ENTER WEIGHT".
1.2 LEFT LED flash displays "70 KG".
1.3 Use Incline adjustment/speed adjustment keys: "+" or "-" to adjust the default value.
1.4 Press ENTER to confirm.
1.5 LEFT LED scrolls "ENTER TIME".
1.6 LEFT LED flash displays "20 MINS".
1.7 Use Incline adjustment/speed adjustment keys: "+" or "-" to adjust the default value.
1.8 Press ENTER to confirm.
1.9 LEFT LED displays "3","2","1".
1.10 Belt starts moving.

2. If Cardio is selected:

2.1 LEFT LED scrolls "CARDIO MODE: ENTER WEIGHT".
2.2 LEFT LED flash displays "70 KG".
2.3 Use Incline adjustment/speed adjustment keys: "+" or "-" to adjust the default value.
2.4 Press ENTER to confirm.

2.5 LEFT LED scrolls"ENTER TIME".
2.6 LEFT LED flash displays "20 MINS".
2.7 Use Incline adjustment/speed adjustment keys: "+" or "-" to adjust the default value.
2.8 Press ENTER to confirm.
2.9 LEFT LED displays "3","2","1".
2.10 Belt starts moving.

3. If Heart Rate is selected:
LEFT LED scrolls "HEART RATE TRAINING: 65%HR".
LEFT LED scrolls: "PRESS ENTER TO SELECT. OR USE Incline adjustment/ speed adjustment keys: "+" or "-" to SELECT 75%HR AND 85%HR".
LEFT LED displayed according to the program selected.
Press ENTER to select:

3.1 If 65% is selected
3.1.1 LEFT LED scrolls "65%HR: ENTER WEIGHT ".
3.1.2 Left LED flash displays "70 KG".
3.1.3 Use Incline adjustment/ speed adjustment keys: "+" or "-" to adjust the default value.
3.1.4 Press ENTER to confirm.
3.1.5 LEFT LED scrolls "ENTER TIME".
3.1.6 LEFT LED flash displays "20 MINS".
3.1.7 Use Incline adjustment/ speed adjustment keys: "+" or "-" to adjust the default value.
3.1.8 Press ENTER to confirm.
3.1.9 LEFT LED scrolls "ENTER AGE".
3.1.10 LEFT LED flash displays "40".
3.1.11 Use Incline adjustment/ speed adjustment keys: "+" or "-" to adjust the default value.
3.1.12 Press ENTER to confirm.
3.1.13 LEFT LED displays "3","2","1".
3.1.14 Belt starts moving.
3.2 If 75% is selected
LED scrolls "75%HR: ENTER WEIGHT".
Same as above.

3.3 If 85% is selected

LED scrolls "85%HR: ENTER WEIGHT ".

Same as above.

4. If Interval is selected:

4.1 LEFT LED scrolls "INTERVAL MODE: ENTER WEIGHT".

4.2 Left LED flash displays "70 KG".

4.3 Use Incline adjustment/ speed adjustment keys: "+" or "-" to adjust the default value.

4.4 Press ENTER to confirm.

4.5 Left LED scrolls "ENTER TIME".

4.6 Left LED flash displays "20 MINS".

4.7 Use Incline adjustment/ speed adjustment keys: "+" or "-" to adjust the default value.

4.8 Press ENTER to confirm.

4.9 Left LED scrolls "ENTER LOWER SPEED ".

4.10 Left LED flash displays "8".

4.11 Use Incline adjustment/ speed adjustment keys: "+" or "-" to adjust the default value.

4.12 Press ENTER to confirm.

4.13 Left LED scrolls "ENTER UPPER SPEED LIMIT".

4.14 Lower LED flash displays "10".

4.15 Use Incline adjustment/ speed adjustment keys: "+" or "-" to adjust the default value.

4.16 Press ENTER to confirm.

4.17 Left LED displays "3","2","1".

4.18 Belt starts moving.

5. If Burn Calories is selected:

5.1 Left LED scrolls "BURN CALORIES MODE: ENTER MAX SPEED".

5.2 Left LED flash displays "10".

5.3 Use Incline adjustment/ speed adjustment keys: "+" or "-" to adjust the default value.

5.4 Press ENTER to confirm.

5.5 Left LED scrolls "ENTER MAX INCLINE".

5.6 Lower LED flash displays "10".

5.7 Use Incline adjustment/ speed adjustment keys: "+" or "-" to adjust the default value.
5.8 Press ENTER confirm.
5.9 Left LED displays "3","2","1".
5.10 Belt starts moving.

6. If target is selected:
Left LED flash displays "TIME TARGET" for 3 seconds.
Left LED scrolls "Press ENTER, or press speed+,- / incline+,- "+" or "-" to select CALORIES TARGET and DISTANCE TARGET".
6.1 If TIME TARGET training is selected:
6.1.1 Left LED scrolls "TIME TARGET: ENTER TIME".
6.1.2 Left LED flash displays "30 MINS".
6.1.3 Use Incline adjustment/ speed adjustment keys: "+" or "-" to adjust the default value.
6.1.4 Press ENTER to confirm.
6.1.5 Left LED displays "3","2","1".
6.1.6 Belt starts moving.

6.2 If CALORIES TARGET training is selected:
6.2.1 Left LED scrolls "CALORIES TARGET: ENTER CALORIES".
6.2.2 Left LED flash displays "100 KCAL".
6.2.3 Use Incline adjustment/ speed adjustment keys: "+" or "-" to adjust the default value.
6.2.4 Press ENTER to confirm.
6.2.5 Left LED displays "3","2","1".
6.2.6 Belt starts moving.

6.3 If DISTANCE TARGET training is selected:
6.3.1 Left LED scrolls "DISTANCE TARGET: ENTER DISTANCE".
6.3.2 Left LED flash displays "5.0 KM".
6.3.3 Use Incline adjustment/ speed adjustment keys: "+" or "-" to adjust the default value.
6.3.4 Press ENTER to confirm.
6.3.5 Left LED displays "3","2","1".
6.3.6 Belt starts moving.

Elevation auto. adjust mode

1. Press & Hold console "Incline+\-" and" Speed+\-" four buttons at the same time for 3sec. then Through auto. adjust mode.
2. Waiting for the finish.

1. Pull out safety key.
2. Press START key three times & hold.
3. Reset the safety key after 3 sec.
4. Release the START key.
5. Using "speed+/-" key adjust SI or ENG (SI-metric, ENG-English).
6. Press ENTER or START key to confirm.

Treadmill Error Messages

Malfunction	Corrective Action
ER01, Communication Error	1. Check console and the main communication cable connection. 2. Check inverter and the main communication cable connection. 3. Replace inverter. 4. Replace console.
ER02, Elevation Error	1. Elevation auto. Sense mode. 2. Connection check. 3. Elevation control PCB LED check. 4. actuator check or replace.
ER04, Over current	1. Connection check. 2. Lubrication. 3. Running deck check. 4. Running belt check. 5. Check if overload. 6. Main motor check or replace. 7. Inverter check or replace.
ER05, Lower voltage	1. Check power AC 220-240V. 2. Check if overload.
ER06, Over load	1. Motor connection check. 2. Lubrication. 3. Running deck check. 4. Running belt check. 5. Overload. 6. Main motor check or replace. 7. Inverter check or replace.
ER07, Emergency stop	1. Reset safety switch. 2. Check the mechanical structure. 3. Connection check. 4. Safety switch check or replace. 5. Console PCB check or replace.
The console no power	1. Check the power voltage by using voltage-meter to see if it is within 220-240V. 2. The switch is turned to the "ON" position, If the switch light isn't lit, replace the switch. 3. Inspect the circuit breaker to see if it has tripped off. If it is tripped off, reset the breaker. And check which part is short-circuited. Then replace the short-circuited part. 4. Check the power cable. 5. Check the adaptor. 6. Check the communication cable.

Electrical Connection

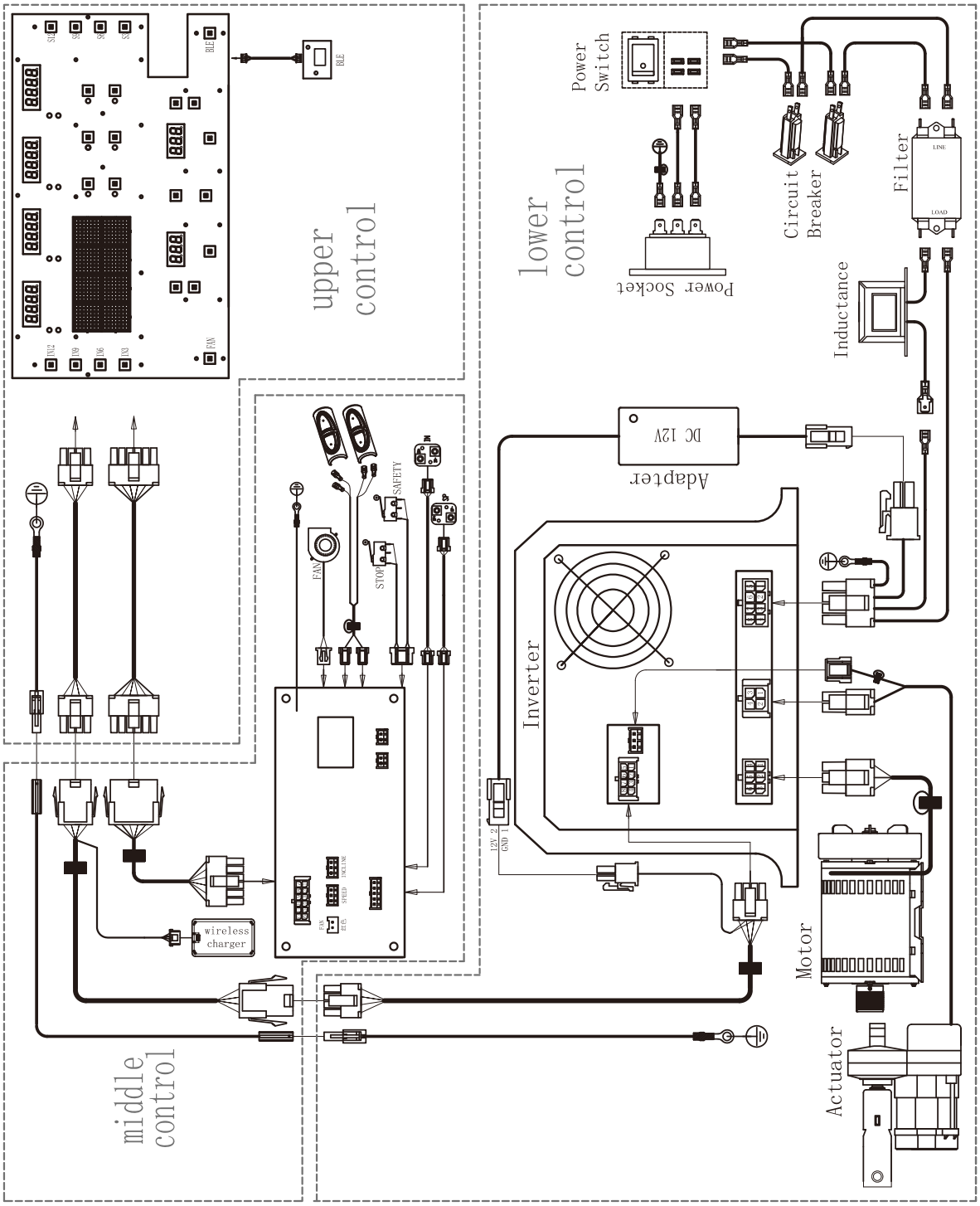

1. Belt Adjustment:

Belt adjustment and tension performs two functions:

*The distance between belt and motor cover from left to right within +/-5MM, then needed to be adjusted.

*Adjust belt by speed not more than 4KMH.

A. Walking Belt is shifting to the right:

Using hex key provided, turn the right rear roller adjustment bolt turn in the clockwise direction shown as below or on the contrary direction.

B. Walking Belt is shifting to the right:

Using hex key provided, turn the right rear roller adjustment bolt turn in the clockwise direction shown as below or on the contrary direction.

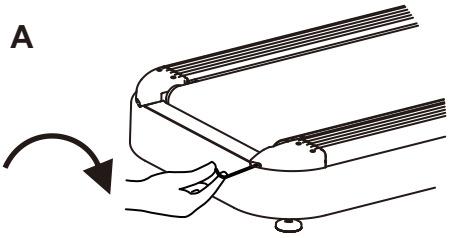

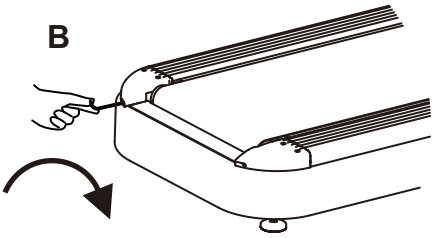

Walking belt is Slipping during use:

Slight walking belt slipping is on normal while using for a period Using the hex key provided, turn both left and right rear roller adjustment bolts in the same distance.

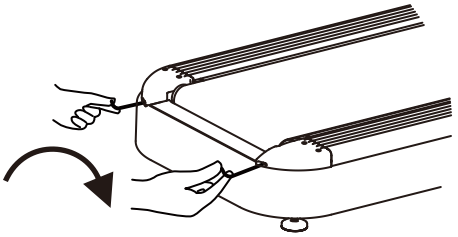

See the correct walking belt shown as below:

A. The distance between walking belt and board is within

15-20mm----Normal

Over 20mm----needed to be adjustded

Under 15mm----needed to be adjustded

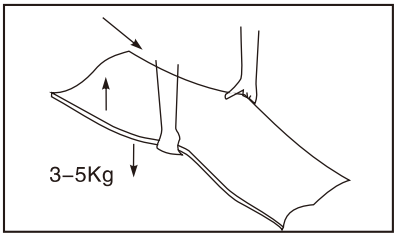

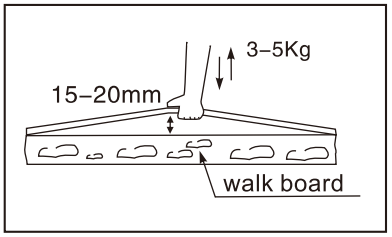

B. The speed for walking belt is 5KMH, hold on the handrail, stand on the side rail, one foot on the belt but without slipping----it's normal.

2. CLEANING:

Routine cleaning of your unit will extend extend the life of your unit.
Warning! To prevent electrical shock, be sure the power to the treadmill is OFF and the unit is unplugged form the wall electrical outlet before attempting any cleaning or mainteance.
After Each Workout: Wipe off the console and other treadmill surfaces with a clean, water dampened soft cloth to remove excess perspiration. After each workout.

3. LUBRICATION:

It is recommended that the walking board be checked peridically (around 3 months) for lubrication to ensure optimal treadmill performance.
Using hex lift the belt and insert the silicone about 20 gram to spray smoothly (adjust belt without slipping after lubrication).

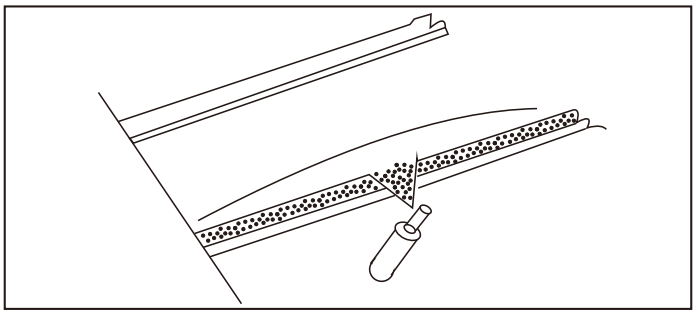

PREVENTIVE MAINTENANCE SCHEDULE

TREADMILL

Item	*Daily*	*Weekly*	*Monthly*	*Quarterly*	*Biannual*	*Annual*
Console Mounting Bolts					Inspect	
Frame	Clean				Inspect	
Power Cord			Inspect			
Display Console	Clean		Inspect			
Handrail & Handlebar	Clean			Inspect		
Front Roller				Clean	Inspect	
Rear Roller				Clean	Inspect	
Emergency Button	Test					
Running belt Tension			Inspect			
Lubricator Reservoir and filter element			Inspect		Clean	
V Belt				Clean	Inspect	
Running Deck						Flip
Running Belt					Inspect	
Control Box					Clean (Vacuum)	
Motor				Clean		

SYSTEM CERTIFICATION ISO 9001 SGS
SYSTEM CERTIFICATION ISO 14001 SGS
SYSTEM CERTIFICATION OHSAS 18001 SGS
SYSTEM CERTIFICATION ISO 10015 SGS